Patriot 100
2 Box Conveyor Seed Tender™
Operator's Manual

Manufactured by
Minden Machine Shop Inc.
1302 K Road
Minden, NE 68959
308-832-0220

Table of Contents

INTRODUCTION

Thank you for choosing the Patriot Seed Tender delivery system. This manual covers the operation and maintenance of the Patriot Seed Tender. All information in this manual is based on the latest production information available at the time of printing. For the latest version of this catalog please call: 1-308-832-0220 or visit www.patriotequip.com

Please become familiar with all safety, operating, maintenance and troubleshooting information. This will ensure your safety and long life for the system.

Minden Machine Shop Inc. reserves the right to make changes at any time without notice and without incurring any obligation.

Purpose:

The Patriot Seed Tender serves as a bulk transfer system for seed and other dry flowable products. It allows the user to move their product from point A to point B via the Patriot Seed Tender on a trailer. This process accelerates delivery and handling time. For example: a mini bulk bag weighing from 1,000 to 3,000 lbs., can be emptied into the Patriot Seed Tender in seconds, the equivalent when transferred in 50 lb. bags would take 20 minutes. The Patriot Seed Tender also allows you to draw seed directly from bins.

The Patriot Seed Tender, full of seed, is transferred to the location where the drill/planter is located. The user parks beside the planter/drill and uses the telescopic movable spout to load the planter/drill. The tender uses a conveyor powered by a gas motor with a clutch system to transfer the product. The conveyor is activated by a manual switch located at the end of the telescopic spout or remotely depending on the application.

Features:

1. Hopper – Designed for flow-ability in cone and proper angle of repose on top. All Patriot Seed Tenders are sized to compliment bulk bags or other measuring used in bulk handling.
2. Ground Controlled Lid – This unique design protects the seed from moisture and is easily opened and closed from the ground.
3. Roll Over Tarp Covers – Some models will use a roll over tarp cover to protect the seed from moisture. The roll over tarp cover is easily rolled and unrolled from the ground.
4. Transfer Conveyor – The transfer conveyor delivers up to 500 Bu./hr. and is very gentle on the product.
5. Ladders – Allows the user to look into the hopper and access seed boxes or seed bags.
6. Site glass – Allows you to monitor the product level within the tanks from eye level.
7. Telescopic spout – The 3-tier model allows extension of nearly 17 ft. reach, with 15 ft. lateral reach.
8. Throttle/Clutch control – The switch located at the end of the telescopic spout controls the variable speed actuator. It controls flow and stops and activates the flow without motor shutdown. The throttle can also be controlled remotely if desired.
9. Shut off gate – The feature allows you to choose which hopper you want to empty and handle different varieties of seed on the same load.

Reference Numbers and Date of Purchase

Seed Tender

Serial Number: _____

Date of Purchase: _____

Trailer

Serial Number: _____

Date of Purchase: _____

SAFETY AND OPERATION RULES

GENERAL SAFETY STATEMENTS

Safety precautions are essential when the use of any mechanical equipment is involved. These precautions are necessary when using, storing, and servicing mechanical equipment. Using this equipment with the respect and caution demanded will considerably lessen the possibilities of personal injury. If safety precautions are overlooked or ignored, personal injury or property damage may occur. This unit was designed for specific applications. It should not be modified or/and used for any application other than which it was designed. If there are any questions regarding its application, write or call. Do not use this unit until you have been advised. For more information, call 1-308-832-0220. Read this entire manual carefully - know your equipment. Consider the application, limitations, and the potential hazards specific to your unit. Occupational safety is of prime concern to us. This manual was written with the safety of the operator and others who come in contact with the equipment as our prime concern. The manual presents some of the day-to-day work problems encountered by the operator and other personnel. We wrote this manual to help you understand safe operating procedures for Patriot Seed Tenders. We want you as our partner in safety. A copy of this manual should be available to all persons who may operate this machine.

It is your responsibility as an owner or operator or supervisor, to know what specific requirements, precautions and work hazards exist and to make these known to all other personnel working with the equipment or in the area, so that they too may take any necessary safety precautions that may be required. Avoid any alterations of the equipment. Such alterations may create a dangerous situation where serious injury or death may occur.

Why is SAFETY important to you?

3 BIG REASONS

1. Accidents disable and kill
2. Accidents cost money
3. Accidents can be avoided

Signal Words

Note the use of the signal words **DANGER, WARNING** and **CAUTION** with safety messages. The appropriate signal word for each message has been selected using the following guidelines:

DANGER – An immediate and specific hazard, which will result in severe personal injury or death if proper precautions are not taken.

WARNING – A specific hazard or unsafe practice, which could result in severe personal injury or death if proper precautions are not taken.

CAUTION – Unsafe practices which could result in personal injury if proper precautions are not taken, or a reminder of good safety practices.

SAFETY ALERT SYMBOL

BE ALERT! YOUR SAFETY IS INVOLVED

The Symbol Shown Above Is Used To Call Your Attention To Instructions Concerning Your Personal Safety. Watch This Symbol - It Points Out Important Safety Precautions. It Means ATTENTION! Become Alert! Your Personal Safety Is Involved! Read The Message That Follows And Be Alert To The Possibility Of Personal Injury Or Death.

Anyone who will operate or work around a Seed Tender shall first read this manual! This manual must be delivered with the equipment to its owner. Failure to read this manual and its safety instructions is a misuse of equipment.

SAFETY EQUIPMENT

Please, remember safety equipment provides important protection for persons around an auger that is in operation. Be sure ALL safety shields and protective devices are installed and properly maintained. If you find any shields or guards damaged or missing, contact Minden Machine Shop Inc. for the correct items.

SERIAL NUMBER

To ensure efficient and prompt service, please furnish us with the model and serial number of your Patriot Seed Tender in all correspondence or other contact. The Serial Number is located inside the front leg above the battery box.

SAFETY PROCEDURES

1. Use only lifting equipment with the proper capacity when loading or lifting bulk bags or lifting the Patriot Seed Tender. Forklifts with too little capacity may tip towards the front where the lifted weight is.
2. Do not use makeshift systems to handle seed or equipment as you may create an unsafe condition.
3. Do not attempt to raise the Patriot Seed Tender unit by hoist or forklift when it is loaded with product.
4. When the Patriot Seed Tender is mounted in pickup box it must be secured by bolting to bed or chained into all four corners. Carrying it loose could cause an accident.
5. Do not unhook your Patriot Seed Tender Trailer while it is full. Any incline or additional weight placed on the back could tip it over backwards.
6. When bulk bag is placed over the Patriot Seed Tender a danger exists when pulling open the pull cord. Hydraulics could fail or operator could make an error causing your arm to be pinned. Do not place a hand or arm into such a position. Extend the pull chord by tying a rope addition or string to lengthen it; this will allow you to pull the string without placing your arm or hand in danger.

7. Do not operate unit without safety shields or guards in place.
8. Do not allow any riders on the Patriot Seed Tender.
9. Do not enter the hoppers when it has product in it as suffocation could result. Do not enter the Patriot Seed Tender when motor is on as the auger could seriously injure.
10. Do not place flammable objects close to engine. This could cause a fire.
11. Never run engine in an enclosed area. As the exhaust is poisonous.
12. Avoid contact with the muffler. It becomes very hot during operation and remains hot for some time after the engine is turned off.
13. Refuel in a well-vented area with the engine turned off. Do not smoke or allow flames close to the refueling area.
14. Do not overfill gas tank and make sure the cap is properly closed.
15. Shut down the engine if clearing an auger plug or obstruction within the auger.
16. Always shut down the engine before performing repairs or maintenance on the seed tender or trailer.
17. In case of any defect or awareness of potential danger, please contact the plant at 308-832-0220 immediately.

LIGHTING AND MARKING

It is the responsibility of the customer to know the lighting and marking requirements of the local highway authorities and to install and maintain the equipment to provide compliance with the regulations. Add extra lights when transporting at night or during periods of limited visibility.

OPERATOR QUALIFICATIONS

Operation of this Seed Tender shall be limited to competent and experienced persons. In addition anyone who will operate or work around a Seed Tender must use good common sense. In order to be qualified, they must also know and meet all other requirements, such as:

1. Some regulations specify that no one under the age of 18 may operate power machinery. This includes Seed Tenders. It is your responsibility to know what these regulations are in your own area or situation.
2. Current OSHA regulations state in part:
"At the time of initial assignment and at least annually thereafter, the employer shall instruct every employee or user in the safe operation and servicing of all equipment with which the employee or user is, or will be involved."
3. Unqualified persons are to stay out of the user defined work area.
4. A person who has not read and understood all operating and safety instruction is not qualified to operate the machine.

SAFETY OVERVIEW

- YOU are responsible for SAFE operation and maintenance of your Patriot Seed Tender.
- YOU must ensure that you and anyone who is going to operate, maintain, or work around the seed tender must be familiar with the operating, maintenance, and safety information contained in the manual. This manual will take you step by step through your working day and alerts you to all good safety practices while operating the tender.
- Remember YOU are the key to safety. GOOD PRACTICES protect not only you but also the people around you. Make these practices a working part of your safety program. Be certain

EVERYONE operating this machine is familiar with the procedures recommended and follows safety precautions. Remember, most accidents can be prevented. Do not risk injury or death by ignoring any information addressed.

- Tender owners must give operating instructions to operators before allowing them to operate the tender. They must be reviewed at least annually thereafter per OSHA regulation 1928.57.
- The most important safety device on the equipment is a SAFE OPERATOR. It is the operator's responsibility to read and understand ALL instructions in the manual and to follow them. All accidents can be avoided!
- Any person who has not read and understood all operation and safety instructions is not qualified to operate the seed tender. An untrained operator exposes himself and bystanders to possible serious injury or death.
- Do not modify the equipment in any way. Unauthorized modifications may impair the functions and/or safety and could affect the life of the equipment.

SAFETY AFFIRMATION

I have read and understand the operator's manual and all safety signs before operation, maintenance, adjusting or unplugging the tender.

- I will allow only trained persons to operate the Patriot Seed Tender. *An untrained operator is not qualified to operate this equipment.
- I have access to a fire extinguisher.
- I have all guards in place and will not operate the Patriot Seed Tender without them.
- I will not allow riders on the Patriot Seed Tender.
- I understand the danger of moving parts (PTO, auger flighting, and pinch points) and will stop engine before servicing.
- I recognize the danger of the auger coming in contact with power lines.
- I will unload the rear compartment first on two-compartment Patriot Seed Tenders.
- I am aware of the need to secure the Patriot Seed Tender to its base, (truck box or trailer floor).
- I understand the danger of working with bulk bags as they are placed over the Patriot Seed Tender.
- I understand that any accidents that occur with the Patriot Seed Tender are my responsibilities.
- I understand that Minden Machine Shop will not be held responsible of any accidents that involve the Patriot Seed Tender.

SIGN OFF SHEET (this must be signed annually as part of your safety program)

As a requirement of OSHA it is necessary for the employer to train the employee in the safe operation and safety procedures with this Seed Tender. We include this sign off sheet for your convenience and personal record keeping.

DATE	EMPLOYER SIGNATURE	EMPLOYEE SIGNATURE

MACHINE INSPECTION

After delivery of your new Seed Tender and/or completion of assembly, before each use, inspection of the machine is mandatory. This inspection should include, but not be limited to:

1. Check to see that all guards are in place, secured and functional.
2. Are all fasteners tight?
3. Check oil levels in the Engine, clutch and auger gearbox. Check the manufacturers owner's manual if unsure of how to perform this inspection.

SAFETY DECALS

1. Keep safety decals clear and legible at all times.
2. Replace decals and signs that are missing or have become unreadable.
3. Safety signs are available from your Dealer or the Manufacturer.

How to install Safety Signs

1. Be sure that the installation area is clean and dry.
2. Decide on the exact position before you remove the backing paper.
3. Align the decal over the specified area and carefully press the small portion with the exposed sticky backing in place.
4. Slowly peel back the remaining paper and carefully smooth the remaining portion of the decal in place.
5. Small air pockets can be pierced with a pin and smoothed out using a piece of decal backing paper.

DESIGNATED WORK AREA

WORK AREA DIAGRAM

Before starting the Seed Tender, a designated work area should be established. The work area should be a perimeter in which no persons should be allowed that are not directly involved in the operation of the Seed Tender. Also all persons in the work area must have read and understand this manual.

RULES FOR SAFE WORK AREA

Under no circumstances should persons not involved in the operation be allowed to trespass into the work area. It shall be the duty of all operators to see that children and/or other persons stay out of the work area! Trespass into the work area by anyone not involved in the actual operation, or trespass into hazard area by anyone, shall result in immediate shut down by the operator. It shall be the responsibility of all operators to see that the work area has secure footing, is clean and free of all debris, and tools, which might cause tripping and/or falling. It shall also be their responsibility to keep the work area clean and orderly during the operation.

Reporting Safety Defects

If you believe that your vehicle has a defect which could cause a crash or could cause an injury or death, you should immediately inform the National Highway Traffic Safety Administration (NHTSA) in addition to notifying Minden Machine Shop, Inc.

If NHTSA receives similar complaints, it may open an investigation and if it finds that a safety defect exists in a group of vehicles, it may order a recall and remedy campaign. However, NHTSA cannot become involved in individual problems between you, your dealer, or Minden Machine Shop, Inc.
To contact NHTSA, you may call the:

- Auto Safety Hotline toll-free at 1-888-327-4236 (TTY: 1-800-424-9153)
- go to http://www.safercar.gov
- Write to: NHTSA, US Department of Transportation,
    - 1200 New Jersey SE
    - Washington, DC 20590.

Tire Safety Information

This portion of the User's Manual contains tire safety information as required by 49 CFR 575.6.

Section 2.1 contains "Steps for Determining Correct Load Limit - Trailer".

Section 2.2 contains "Steps for Determining Correct Load Limit – Tow Vehicle".

Section 2.3 contains a Glossary of Tire Terminology, including "cold inflation pressure", "maximum inflation pressure", "recommended inflation pressure", and other non-technical terms.

Section 2.4 contains information from the NHTSA brochure entitled "Tire Safety – Everything Rides On It".

This brochure, as well as the preceding subsections, describes the following items:

Tire labeling, including a description and explanation of each marking on the tires, and information about the DOT Tire Identification Number (TIN). Recommended tire inflation pressure, including a description and explanation of:

1. Cold inflation pressure.
2. Vehicle Placard and location on the vehicle.
3. Adverse safety consequences of under inflation (including tire failure).
4. Measuring and adjusting air pressure for proper inflation.
5. Tire Care, including maintenance and safety practices.
6. Vehicle load limits, including a description and explanation of the following items:
7. Locating and understanding the load limit information, total load capacity, and cargo capacity.
8. Calculating total and cargo capacities with varying seating configurations including quantitative examples showing / illustrating how the vehicles cargo and luggage capacity decreases as combined number and size of occupants' increases. This item is also discussed in Section 3.
9. Determining compatibility of tire and vehicle load capabilities.
10. Adverse safety consequences of overloading on handling and stopping on tires.

Steps for Determining Correct Load Limit – Trailer

Determining the load limits of a trailer includes more than understanding the load limits of the tires alone. On all trailers there is a Federal certification/VIN label that is located on the forward half of the left (road) side of the unit. This certification/VIN label will indicate the trailer's Gross Vehicle Weight Rating (GVWR). This is the most weight the fully loaded trailer can weigh. It will also provide the Gross Axle Weight Rating (GAWR). This is the most a particular axle can weigh. If there are multiple axles, the GAWR of each axle will be provided.

If your trailer has a GVWR of 10,000 pounds or less, there is a vehicle placard located in the same location as the certification label described above. This placard provides tire and loading information. In addition, this placard will show a statement regarding maximum cargo capacity. Cargo can be added to the trailer, up to the maximum weight specified on the placard. The combined weight of the cargo is provided as a single number. In any case, remember: the total weight of a fully loaded trailer cannot exceed the stated GVWR.

For trailers with living quarters installed, the weight of water and propane also need to be considered. The weight of fully filled propane containers is considered part of the weight of the trailer before it is loaded with cargo, and is not considered part of the disposable cargo load. Water however, is a disposable cargo weight and is treated as such. If there is a fresh water storage tank of 100 gallons, this tank when filled

would weigh about 800 pounds. If more cargo is being transported, water can be off-loaded to keep the total amount of cargo added to the vehicle within the limits of the GVWR so as not to overload the vehicle. Understanding this flexibility will allow you, the owner, to make choices that fit your travel needs.

When loading your cargo, be sure it is distributed evenly to prevent overloading front to back and side to side. Heavy items should be placed low and as close to the axle positions as reasonable. Too many items on one side may overload a tire. The best way to know the actual weight of the vehicle is to weigh it at a public scale. Talk to your dealer to discuss the weighing methods needed to capture the various weights related to the trailer. This would include the weight empty or unloaded, weights per axle, wheel, hitch or king-pin, and total weight.

Excessive loads and/or under inflation cause tire overloading and, as a result, abnormal tire flexing occurs. This situation can generate an excessive amount of heat within the tire. Excessive heat may lead to tire failure. It is the air pressure that enables a tire to support the load, so proper inflation is critical. The proper air pressure may be found on the certification/VIN label and/or on the Tire Placard. This value should never exceed the maximum cold inflation pressure stamped on the tire.

Trailers 10,000 Pounds GVWR or Less

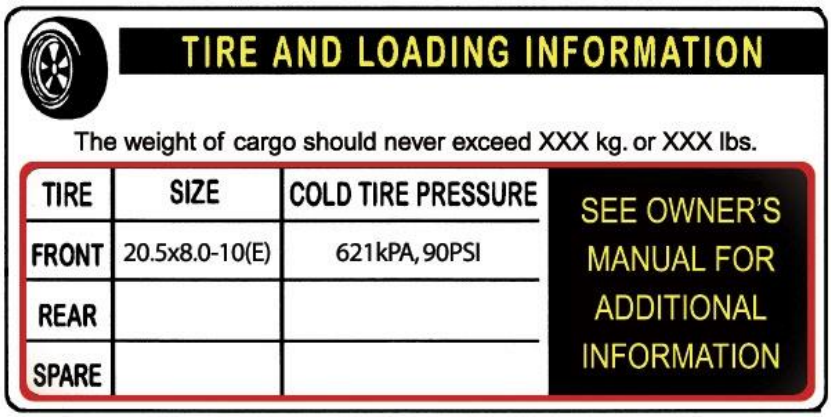

Tire and Loading Information Placard – Figure 1-1

1. Locate the statement, “The weight of cargo should never exceed XXX kg or XXX lbs.,” on your vehicle’s placard. See figure 1-1.
2. This figure equals the available amount of cargo and luggage load capacity.
3. Determine the combined weight of luggage and cargo being loaded on the vehicle. That weight may not safely exceed the available cargo and luggage load capacity.

The trailer’s placard refers to the Tire Information Placard attached adjacent to or near the trailer’s VIN (Certification) label at the left front of the trailer.

Trailers over 10,000 Pounds GVWR (Note: These trailers are not required to have a tire information placard on the vehicle)

Determine the empty weight of your trailer by weighing the trailer using a public scale or other means. This step does not have to be repeated.

Locate the GVWR (Gross Vehicle Weight Rating) of the trailer on your trailer’s VIN (Certification) label.

Subtract the empty weight of your trailer from the GVWR stated on the VIN label. That weight is the maximum available cargo capacity of the trailer and may not be safely exceeded.

Steps for Determining Correct Load Limit – Tow Vehicle

1. Locate the statement, “The combined weight of occupants and cargo should never exceed XXX lbs.,” on your vehicle’s placard.
2. Determine the combined weight of the driver and passengers who will be riding in your vehicle.
3. Subtract the combined weight of the driver and passengers from XXX kilograms or XXX pounds.
4. The resulting figure equals the available amount of cargo and luggage capacity. For example, if the “XXX” amount equals 1400 lbs. and there will be five 150 lb. passengers in your vehicle, the amount of available cargo and luggage capacity is 650 lbs. (1400-750 (5 x 150) = 650 lbs.).
5. Determine the combined weight of luggage and cargo being loaded on the vehicle. That weight may not safely exceed the available cargo and luggage capacity calculated in Step # 4.
6. If your vehicle will be towing a trailer, load from your trailer will be transferred to your vehicle. Consult the tow vehicle’s manual to determine how this weight transfer reduces the available cargo and luggage capacity of your vehicle.

Glossary of Tire Terminology

Accessory weight
The combined weight (in excess of those standard items which may be replaced) of automatic transmission, power steering, power brakes, power windows, power seats, radio and heater, to the extent that these items are available as factory-installed equipment (whether installed or not).

Bead
The part of the tire that is made of steel wires, wrapped or reinforced by ply cords and that is shaped to fit the rim.

Bead separation
This is the breakdown of the bond between components in the bead.

Bias ply tire
A pneumatic tire in which the ply cords that extend to the beads are laid at alternate angles substantially less than 90 degrees to the centerline of the tread.

Carcass
The tire structure, except tread and sidewall rubber which, when inflated, bears the load.

Chunking
The breaking away of pieces of the tread or sidewall.

Cold inflation pressure
The pressure in the tire before you drive.

Cord
The strands forming the plies in the tire.

Cord separation
The parting of cords from adjacent rubber compounds.

Cracking
Any parting within the tread, sidewall, or inner liner of the tire extending to cord material.

CT
A pneumatic tire with an inverted flange tire and rim system in which the rim is designed with rim flanges pointed radially inward and the tire is designed to fit on the underside of the rim in a manner that encloses the rim flanges inside the air cavity of the tire.

Curb weight
The weight of a motor vehicle with standard equipment including the maximum capacity of fuel, oil, and coolant, and, if so equipped, air conditioning and additional weight optional engine.

Extra load tire
A tire designed to operate at higher loads and at higher inflation pressures than the corresponding standard tire.

Groove
The space between two adjacent tread ribs.

Gross Axle Weight Rating
The maximum weight that any axle can support, as published on the Certification / VIN label on the front left side of the trailer. Actual weight determined by weighing each axle on a public scale, with the trailer attached to the towing vehicle.

Gross Vehicle Weight Rating
The maximum weight of the fully loaded trailer, as published on the Certification / VIN label. Actual weight determined by weighing trailer on a public scale, without being attached to the towing vehicle.

Hitch Weight
The downward force exerted on the hitch ball by the trailer coupler.

Inner liner
The layer(s) forming the inside surface of a tubeless tire that contains the inflating medium within the tire.

Inner liner separation
The parting of the inner liner from cord material in the carcass.

Intended outboard sidewall
The sidewall that contains a white-wall, bears white lettering or bears manufacturer, brand, and/or model name molding that is higher or deeper than the same molding on the other sidewall of the tire or the outward facing sidewall of an asymmetrical tire that has a particular side that must always face outward when mounted on a vehicle.

Light truck (LT) tire
A tire designated by its manufacturer as primarily intended for use on lightweight trucks or multipurpose passenger vehicles.

Load rating
The maximum load that a tire is rated to carry for a given inflation pressure.

Maximum load rating
The load rating for a tire at the maximum permissible inflation pressure for that tire.

Maximum permissible inflation pressure
The maximum cold inflation pressure to which a tire may be inflated.

Maximum loaded vehicle weight
The sum of curb weight, accessory weight, vehicle capacity weight, and production options weight.

Measuring rim
The rim on which a tire is fitted for physical dimension requirements.

Pin Weight
The downward force applied to the 5th wheel or gooseneck ball, by the trailer kingpin or gooseneck coupler.

Non-pneumatic rim
A mechanical device which, when a non-pneumatic tire assembly incorporates a wheel, supports the tire, and attaches, either integrally or separably, to the wheel center member and upon which the tire is attached.

Non-pneumatic spare tire assembly
A non-pneumatic tire assembly intended for temporary use in place of one of the pneumatic tires and rims that are fitted to a passenger car in compliance with the requirements of this standard.

Non-pneumatic tire
A mechanical device which transmits, either directly or through a wheel or wheel center member, the vertical load and tractive forces from the roadway to the vehicle, generates the tractive forces that provide the directional control of the vehicle and does not rely on the containment of any gas or fluid for providing those functions.

Non-pneumatic tire assembly
A non-pneumatic tire, alone or in combination with a wheel or wheel center member, which can be mounted on a vehicle.

Normal occupant weight
This means 68 kilograms (150 lbs.) times the number of occupants specified in the second column of Table I of 49 CFR 571.110.

Occupant distribution
The distribution of occupants in a vehicle as specified in the third column of Table I of 49 CFR 571.110.

Open splice
Any parting at any junction of tread, sidewall, or inner liner that extends to cord material.

Outer diameter
The overall diameter of an inflated new tire.

Overall width
The linear distance between the exteriors of the sidewalls of an inflated tire, including elevations due to labeling, decorations, or protective bands or ribs.

Ply
A layer of rubber-coated parallel cords.

Ply separation
A parting of rubber compound between adjacent plies.

Pneumatic tire
A mechanical device made of rubber, chemicals, fabric and steel or other materials, that, when mounted on an automotive wheel, provides the traction and contains the gas or fluid that sustains the load.

Production options weight
The combined weight of those installed regular production options weighing over 2.3 kilograms (5 lbs.) in excess of those standard items which they replace, not previously considered in curb weight or accessory weight, including heavy duty brakes, ride levelers, roof rack, heavy duty battery, and special trim.

Radial ply tire
A pneumatic tire in which the ply cords that extend to the beads are laid at substantially 90 degrees to the centerline of the tread.

Recommended inflation pressure
This is the inflation pressure provided by the vehicle manufacturer on the Tire Information label and on the Certification / VIN tag.

Reinforced tire
A tire designed to operate at higher loads and at higher inflation pressures than the corresponding standard tire.

Rim
A metal support for a tire or a tire and tube assembly upon which the tire beads are seated.

Rim diameter
This means the nominal diameter of the bead seat.

Rim size designation
This means the rim diameter and width.

Rim type designation
This means the industry of manufacturer's designation for a rim by style or code.

Rim width
This means the nominal distance between rim flanges.

Section width
The linear distance between the exteriors of the sidewalls of an inflated tire, excluding elevations due to labeling, decoration, or protective bands.

Sidewall
That portion of a tire between the tread and bead.

Sidewall separation
The parting of the rubber compound from the cord material in the sidewall.

Special Trailer (ST) tire
The "ST" is an indication the tire is for trailer use only.

Test rim
The rim on which a tire is fitted for testing, and may be any rim listed as appropriate for use with that tire.

Tread
That portion of a tire that comes into contact with the road.

Tread rib
A tread section running circumferentially around a tire.

Tread separation
Pulling away of the tread from the tire carcass.

Tread wear indicators (TWI)
The projections within the principal grooves designed to give a visual indication of the degrees of wear of the tread.

Vehicle capacity weight
The rated cargo and luggage load plus 68 kilograms (150 lbs.) times the vehicle's designated seating capacity.

Vehicle maximum load on the tire
The load on an individual tire that is determined by distributing to each axle its share of the maximum loaded vehicle weight and dividing by two.

Vehicle normal load on the tire
The load on an individual tire that is determined by distributing to each axle its share of the curb weight, accessory weight, and normal occupant weight (distributed in accordance with Table I of CRF 49 571.110) and dividing by 2.

Weather side
The surface area of the rim not covered by the inflated tire.

Wheel center member
In the case of a non-pneumatic tire assembly incorporating a wheel, a mechanical device which attaches, either integrally or separably, to the non-pneumatic rim and provides the connection between the non-pneumatic rim and the vehicle; or, in the case of a non-pneumatic tire assembly not incorporating a

wheel, a mechanical device which attaches, either integrally or separably, to the non-pneumatic tire and provides the connection between tire and the vehicle.

Wheel-holding fixture
The fixture used to hold the wheel and tire assembly securely during testing.

Tire Safety - Everything Rides On It

The National Traffic Safety Administration (NHTSA) has published a brochure (DOT HS 809 361) that discusses all aspects of Tire Safety, as required by CFR 575.6. This brochure is reproduced in part below. It can be obtained and downloaded from NHTSA, free of charge, from the following web site:

http://www.nhtsa.dot.gov/cars/rules/TireSafety/ridesonit/tires_index.html

Studies of tire safety show that maintaining proper tire pressure, observing tire and vehicle load limits (not carrying more weight in your vehicle than your tires or vehicle can safely handle), avoiding road hazards, and inspecting tires for cuts, slashes, and other irregularities are the most important things you can do to avoid tire failure, such as tread separation or blowout and flat tires. These actions, along with other care and maintenance activities, can also:

- Improve vehicle handling
- Help protect you and others from avoidable breakdowns and accidents
- Improve fuel economy
- Increase the life of your tires.

This booklet presents a comprehensive overview of tire safety, including information on the following topics:

- Basic tire maintenance
- Uniform Tire Quality Grading System
- Fundamental characteristics of tires
- Tire safety tips

Use this information to make tire safety a regular part of your vehicle maintenance routine. Recognize that the time you spend is minimal compared with the inconvenience and safety consequences of a flat tire or other tire failure.

Safety First–Basic Tire Maintenance

Properly maintained tires improve the steering, stopping, traction, and load-carrying capability of your vehicle. Underinflated tires and overloaded vehicles are a major cause of tire failure. Therefore, as mentioned above, to avoid flat tires and other types of tire failure, you should maintain proper tire pressure, observe tire and vehicle load limits, avoid road hazards, and regularly inspect your tires.

Finding Your Vehicle's Recommended Tire Pressure and Load Limits

Tire information placards and vehicle certification labels contain information on tires and load limits. These labels indicate the vehicle manufacturer's information including:

1. Recommended tire size
2. Recommended tire inflation pressure
3. Vehicle capacity weight (VCW–the maximum occupant and cargo weight a vehicle is designed to carry)

4. Front and rear gross axle weight ratings (GAWR– the maximum weight the axle systems are designed to carry).

Both placards and certification labels are permanently attached to the trailer near the left front.

Understanding Tire Pressure and Load Limits

Tire inflation pressure is the level of air in the tire that provides it with load-carrying capacity and affects the overall performance of the vehicle. The tire inflation pressure is a number that indicates the amount of air pressure– measured in pounds per square inch (psi)–a tire requires to be properly inflated. (You will also find this number on the vehicle information placard expressed in kilopascals (kpa), which is the metric measure used internationally.)

Manufacturers of passenger vehicles and light trucks determine this number based on the vehicle's design load limit, that is, the greatest amount of weight a vehicle can safely carry and the vehicle's tire size. The proper tire pressure for your vehicle is referred to as the "recommended cold inflation pressure." (As you will read below, it is difficult to obtain the recommended tire pressure if your tires are not cold.)
Because tires are designed to be used on more than one type of vehicle, tire manufacturers list the "maximum permissible inflation pressure" on the tire sidewall. This number is the greatest amount of air pressure that should ever be put in the tire under normal driving conditions.

Checking Tire Pressure

It is important to check your vehicle's tire pressure at least once a month for the following reasons:

1. Most tires may naturally lose air over time.
2. Tires can lose air suddenly if you drive over a pothole or other object or if you strike the curb when parking.
3. With radial tires, it is usually not possible to determine under inflation by visual inspection.

For convenience, purchase a tire pressure gauge to keep in your vehicle. Gauges can be purchased at tire dealerships, auto supply stores, and other retail outlets.
The recommended tire inflation pressure that vehicle manufacturers provide reflects the proper psi when a tire is cold. The term cold does not relate to the outside temperature. Rather, a cold tire is one that has not been driven on for at least three hours. When you drive, your tires get warmer, causing the air pressure within them to increase. Therefore, to get an accurate tire pressure reading, you must measure tire pressure when the tires are cold or compensate for the extra pressure in warm tires.

Steps for Maintaining Proper Tire Pressure

- Step 1: Locate the recommended tire pressure on the vehicle's tire information placard, certification label, or in the owner's manual.
- Step 2: Record the tire pressure of all tires.
- Step 3: If the tire pressure is too high in any of the tires, slowly release air by gently pressing on the tire valve stem with the edge of your tire gauge until you get to the correct pressure.
- Step 4: If the tire pressure is too low, note the difference between the measured tire pressure and the correct tire pressure. These "missing" pounds of pressure are what you will need to add.

- Step 5: At a service station, add the missing pounds of air pressure to each tire that is underinflated.
- Step 6: Check all the tires to make sure they have the same air pressure (except in cases in which the front and rear tires are supposed to have different amounts of pressure).

If you have been driving your vehicle and think that a tire is underinflated, fill it to the recommended cold inflation pressure indicated on your vehicle's tire information placard or certification label. While your tire may still be slightly underinflated due to the extra pounds of pressure in the warm tire, it is safer to drive with air pressure that is slightly lower than the vehicle manufacturer's recommended cold inflation pressure than to drive with a significantly underinflated tire. Since this is a temporary fix, don't forget to recheck and adjust the tire's pressure when you can obtain a cold reading.

Tire Size

To maintain tire safety, purchase new tires that are the same size as the vehicle's original tires or another size recommended by the manufacturer. Look at the tire information placard, the owner's manual, or the sidewall of the tire you are replacing to find this information. If you have any doubt about the correct size to choose, consult with the tire dealer.

Tire Tread

The tire tread provides the gripping action and traction that prevent your vehicle from slipping or sliding, especially when the road is wet or icy. In general, tires are not safe and should be replaced when the tread is worn down to 1/16 of an inch. Tires have built-in tread wear indicators that let you know when it is time to replace your tires. These indicators are raised sections spaced intermittently in the bottom of the tread grooves. When they appear "even" with the outside of the tread, it is time to replace your tires. Another method for checking tread depth is to place a penny in the tread with Lincoln's head upside down and facing you. If you can see the top of Lincoln's head, you are ready for new tires.

Tire Balance and Wheel Alignment

To avoid vibration or shaking of the vehicle when a tire rotates, the tire must be properly balanced. This balance is achieved by positioning weights on the wheel to counterbalance heavy spots on the wheel-and-tire assembly. A wheel alignment adjusts the angles of the wheels so that they are positioned correctly relative to the vehicle's frame. This adjustment maximizes the life of your tires. These adjustments require special equipment and should be performed by a qualified technician.

Tire Repair

The proper repair of a punctured tire requires a plug for the hole and a patch for the area inside the tire that surrounds the puncture hole. Punctures through the tread can be repaired if they are not too large, but punctures to the sidewall should not be repaired. Tires must be removed from the rim to be properly inspected before being plugged and patched.

Tire Fundamentals

Federal law requires tire manufacturers to place standardized information on the sidewall of all tires. This information identifies and describes the fundamental characteristics of the tire and also provides a tire identification number for safety standard certification and in case of a recall.

Information on Passenger Vehicle Tires

Please refer to the diagram below.

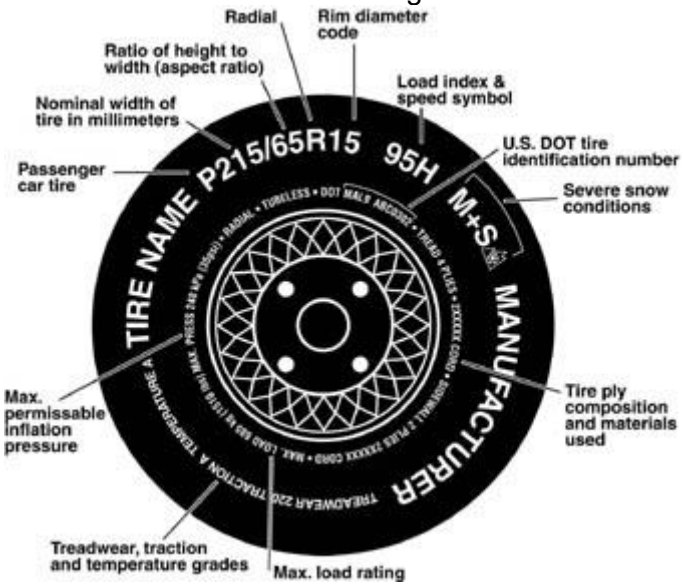

P
The "P" indicates the tire is for passenger vehicles.

Next number
This three-digit number gives the width in millimeters of the tire from sidewall edge to sidewall edge. In general, the larger the number, the wider the tire.

Next number
This two-digit number, known as the aspect ratio, gives the tire's ratio of height to width. Numbers of 70 or lower indicate a short sidewall for improved steering response and better overall handling on dry pavement.

R
The "R" stands for radial. Radial ply construction of tires has been the industry standard for the past 20 years.

Next number
This two-digit number is the wheel or rim diameter in inches. If you change your wheel size, you will have to purchase new tires to match the new wheel diameter.

Next number
This two- or three-digit number is the tire's load index. It is a measurement of how much weight each tire can support. You may find this information in your owner's manual. If not, contact a local tire dealer. Note: You may not find this information on all tires because it is not required by law.

M+S
The "M+S" or "M/S" indicates that the tire has some mud and snow capability. Most radial tires have these markings; hence, they have some mud and snow capability.

Speed Rating
The speed rating denotes the speed at which a tire is designed to be driven for extended periods of time. The ratings range from 99 miles per hour (mph) to 186 mph. These ratings are listed below. Note: You may not find this information on all tires because it is not required by law.

Letter Rating	Speed Rating
Q	99 mph
R	106 mph
S	112 mph
T	118 mph
U	124 mph
H	130 mph
V	149 mph
W	168* mph
Y	186* mph

* For tires with a maximum speed capability over 149 mph, tire manufacturers sometimes use the letters ZR. For those with a maximum speed capability over 186 mph, tire manufacturers always use the letters ZR.

U.S. DOT Tire Identification Number
This begins with the letters "DOT" and indicates that the tire meets all federal standards. The next two numbers or letters are the plant code where it was manufactured, and the last four numbers represent the week and year the tire was built. For example, the numbers 3197 means the 31st week of 1997. The other numbers are marketing codes used at the manufacturer's discretion. This information is used to contact consumers if a tire defect requires a recall.

Tire Ply Composition and Materials Used
The number of plies indicates the number of layers of rubber-coated fabric in the tire. In general, the greater the number of plies, the more weight a tire can support. Tire manufacturers also must indicate the materials in the tire, which include steel, nylon, polyester, and others.

Maximum Load Rating
This number indicates the maximum load in kilograms and pounds that can be carried by the tire.

Maximum Permissible Inflation Pressure
This number is the greatest amount of air pressure that should ever be put in the tire under normal driving conditions.

UTQGS Information

Tread wear Number
This number indicates the tire's wear rate. The higher the tread wear number is, the longer it should take for the tread to wear down. For example, a tire graded 400 should last twice as long as a tire graded 200.

Traction Letter

This letter indicates a tire's ability to stop on wet pavement. A higher graded tire should allow you to stop your car on wet roads in a shorter distance than a tire with a lower grade. Traction is graded from highest to lowest as "AA","A", "B", and "C".

Temperature Letter

This letter indicates a tire's resistance to heat. The temperature grade is for a tire that is inflated properly and not overloaded. Excessive speed, under inflation or excessive loading, either separately or in combination, can cause heat build-up and possible tire failure. From highest to lowest, a tire's resistance to heat is graded as "A", "B", or "C".

Additional Information on Light Truck Tires

Please refer to the following diagram.

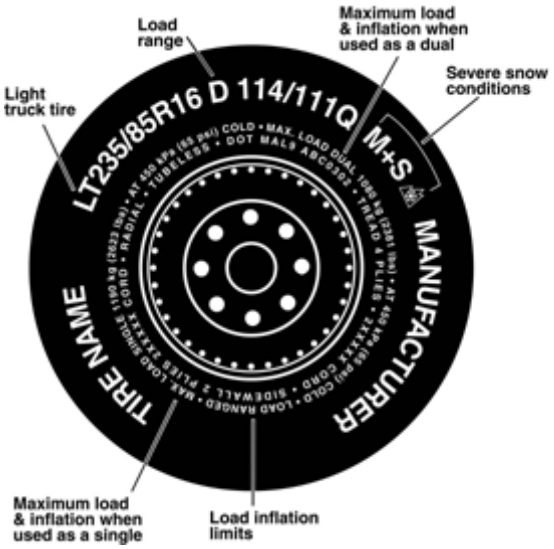

Tires for light trucks have other markings besides those found on the sidewalls of passenger tires.

LT

The "LT" indicates the tire is for light trucks <u>or</u> trailers.

ST

An "ST" is an indication the tire is for trailer use only.

Max. Load Dual kg (lbs.) at kPa (psi) Cold

This information indicates the maximum load and tire pressure when the tire is used as a dual, that is, when four tires are put on each rear axle (a total of six or more tires on the vehicle).

Max. Load Single kg (lbs.) at kPa (psi) Cold

This information indicates the maximum load and tire pressure when the tire is used as a single.

Load Range

This information identifies the tire's load-carrying capabilities and its inflation limits.

Tire Safety Tips

Preventing Tire Damage

1. Slow down if you have to go over a pothole or other object in the road.
2. Do not run over curbs or other foreign objects in the roadway, and try not to strike the curb when parking.

Tire Safety Checklist

1. Check tire pressure regularly (at least once a month), including the spare.
2. Inspect tires for uneven wear patterns on the tread, cracks, foreign objects, or other signs of wear or trauma.
3. Remove bits of glass and foreign objects wedged in the tread.
4. Make sure your tire valves have valve caps.
5. Check tire pressure before going on a long trip.
6. Do not overload your vehicle. Check the Tire Information and Loading Placard or User's manual for the maximum recommended load for the vehicle.

Wheel Attachment and Torque Requirements

Patriot Equipment would like to reiterate the extreme importance of properly matching your axles, wheels, and tires when specifying or replacing your trailer wheels. It is of equal importance that you apply and maintain proper wheel mounting torque on your trailer axle. Please follow the wheel selection, torque requirement, and torque sequence guidelines that follow.

Wheel Selection

Wheels are a very important and critical component of your running gear system. When specifying or replacing your trailer wheels it is important that the wheels, tires, and axle are properly matched. The following characteristics are extremely important and should be thoroughly checked when replacement wheels are considered.

1. **Bolt Circle:** Many bolt circle dimensions are available and some vary by so little that it might be possible to attach an improper wheel that does not match the axle hub. Be sure to match your wheel to the axle hub, bolts circle, hub pilot and wheel mount surface to hub face. Also, confirm that proper studs stick out.
2. **Capacity:** Make sure that the wheels have enough load carrying capacity and pressure rating to match the maximum load of the axle tire and trailer.
3. **Offset:** This refers to the relationship of the center line of the tire to the hub face of the axle. Care should be taken to match any replacement wheel with the same offset wheel as originally equipped. Failure to match offset can result in reducing the load carrying capacity of your axle.
4. **Rim Contour.**

CAUTION

Replacement tires must meet the same specifications as the originals. Mismatched tires and rims may come apart with explosive force and cause personal injury to yourself and others. Mismatched tires and rims can also blow out and cause you to lose control and have an accident which can result in serious injury or death.

CAUTION

Do not attempt to repair or modify a wheel. Even minor modifications can have a great effect. Do not install a tube to correct a leak through the rim. If the rim is cracked, the air pressure in the tube may cause the pieces of the rim to explode with great force and can cause serious injury or death.

Torque Requirements

You should always consult with the wheel manufacturer to determine the appropriate torque level for your wheels. It is extremely important to apply and maintain proper wheel mounting torque on your trailer axle. Torque is a measure of the amount of tightening applied to a fastener (nut or bolt) and is expressed as length times force. For example, a force of 90 pounds applied at the end of a wrench one foot long will yield 90 Ft Lbs. of torque. Torque wrenches are the proper method to ensure torque is applied correctly to a fastener.

CAUTION

Wheel nuts or bolts must be tightened and maintained at the proper torque levels to prevent loose wheels, broken studs, and possible dangerous separation of wheels from your axle, which can lead to an accident, personal injuries or death.

Be sure to use only the fasteners matched to the cone angle of your wheel (usually 60 degrees or 90 degrees). The proper procedure for attaching your wheels is as follows:

1. Start all nuts/bolts by hand to prevent cross threading.
2. The tightening should be done in stages;
    a. Initially snug (10 ft-lb) the nuts/bolts to align and seat the wheel to the hub, in the order described in the torque sequence diagram below.
    b. Tighten the nuts/bolts performing the wheel torque sequence below.
3. Wheel nuts/bolts should be torqued before first road use and after each wheel removal. Check and re-torque after the first 10 miles, 25 miles and again at 50 miles. Check periodically thereafter, THIS IS VERY IMPORTANT.
4. Wheel nuts are designed to have full thread engagement with the wheel stud. Wheel stud threads should be visible outside the wheel nut. There will be varying amounts of thread stick out depending on variables such as center disc thickness and nut thickness. In general, there should be approximately three threads visible past the end of the nut.

Wheel Attachment and Torque Requirements

Wheel Installation Torque Sequence (Ft. Lbs.)					
Wheel Size	Stud Size	1st Stage	2nd Stage	Final Torque	Cone Nut Degree
12" - 440 BC	1/2"-20	20-25	35-40	60-75	60 Degree Cone Nut
12" - 545 BC	1/2"-20	20-25	35-40	60-75	60 Degree Cone Nut
13" - 440 BC	1/2"-20	20-25	35-40	60-75	60 Degree Cone Nut
13" - 545 BC	1/2"-20	20-25	35-40	60-75	60 Degree Cone Nut
14" - 545 BC	1/2"-20	20-25	50-60	100-120	60 Degree Cone Nut
15" - 545 BC	1/2"-20	20-25	50-60	100-120	60 Degree Cone Nut
15" - 655 BC	1/2"-20	20-25	50-60	100-120	60 Degree Cone Nut
16" - 655 BC	1/2"-20	20-25	50-60	100-120	60 Degree Cone Nut
16" - 865 BC	9/16"-18	20-25	50-60	140-170	60 Degree Cone Nut
16.5" - 655 BC	1/2"-20	20-25	50-60	100-120	60 Degree Cone Nut
16.5" - 865 BC	9/16"-18	20-25	50-60	140-170	60 Degree Cone Nut
16.5" x 9.75" 865 BC	5/8"-18	50-60	120-125	175-225	Special Stud Piloted with 90 degree Cone Nuts
17.5" Hub Pilot 865 BC	5/8"-18	50-60	100-120	190-210	Hub piloted with clamp ring. 90 degree cone nuts and greased threads.
17.5" Hub Pilot 865 BC	5/8"-18	50-60	90-200	275-325	Hub piloted with flange nut
17.5" Hub Pilot 865 BC	5/8"-18	50-60	60-110	150-175	Hub piloted with swivel flange nut

Medium and Heavy Duty Torque Requirements (Ft. Lbs.)				
Description	Part Number	Application	Torque Min. Ft. Lbs.	Torque Max. Ft. Lbs
5/8-19 90 degree Cone	006-109-00	Clamp Ring 033-052-01	190	210 Grease Threads
3/4-10 Hex Nut	006-117-00	Demountable Rim Clamp	210	260
3/4-16 Sherical Nut	006-064-01, 02 006-069-01, 02	Single Wheel Inner Dual	450 450	500 500
1-1/8 - 16 Spherical Nut	006-070-01, 02	Outer Dual	450	500
5/8-18 Non-swiveling Flange Nut	006-058-00	Wheels	275	325
5/8-18 Swiveling Flange Nut	006-209-00	Wheels	150	175
M22-1.5	006-118-00	Swiveling Flange Nut	450	500

Minden Machine Shop Inc.
1302 K Road Minden, NE
800-264-6587 / 308-832-0220

Torque Sequence

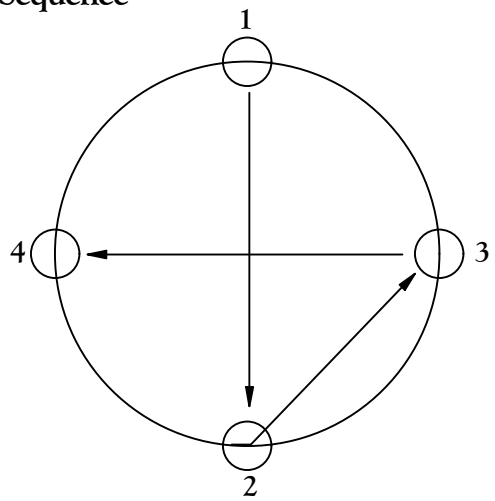

4 Bolt

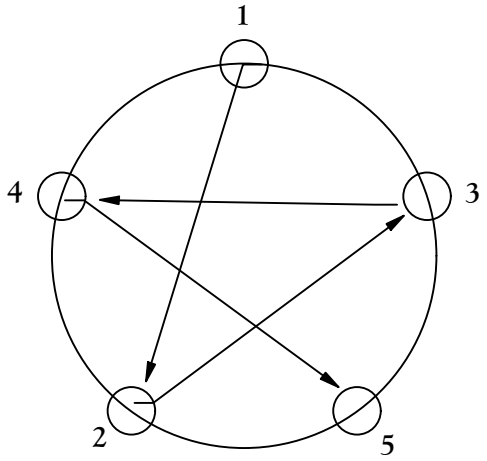

5 Bolt

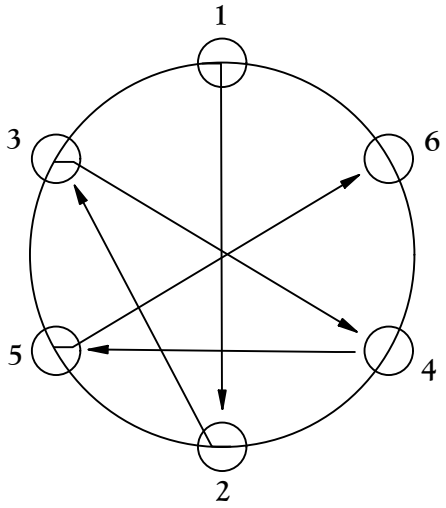

6 Bolt

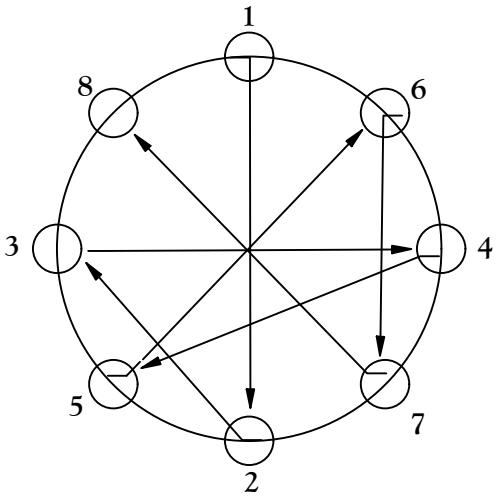

8 Bolt

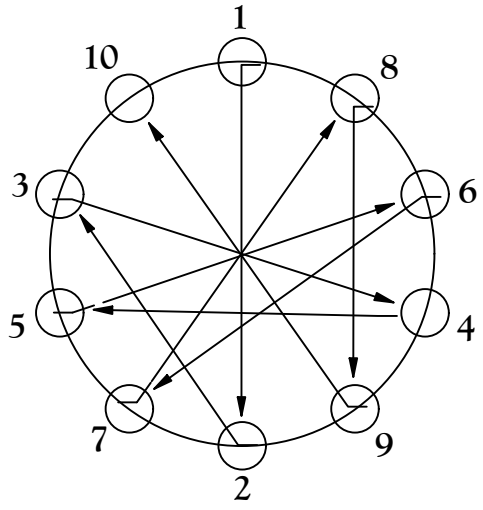

10 Bolt

Minden Machine Shop Inc.
1302 K Road Minden, NE
800-264-6587 / 308-832-0220

Safety Decals

100C (2 Box Conveyor) Seed Tender Decals

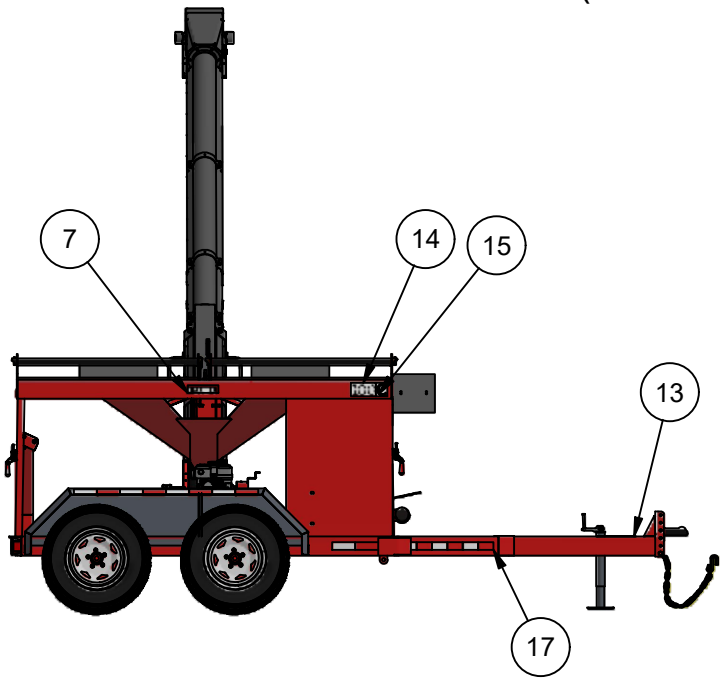

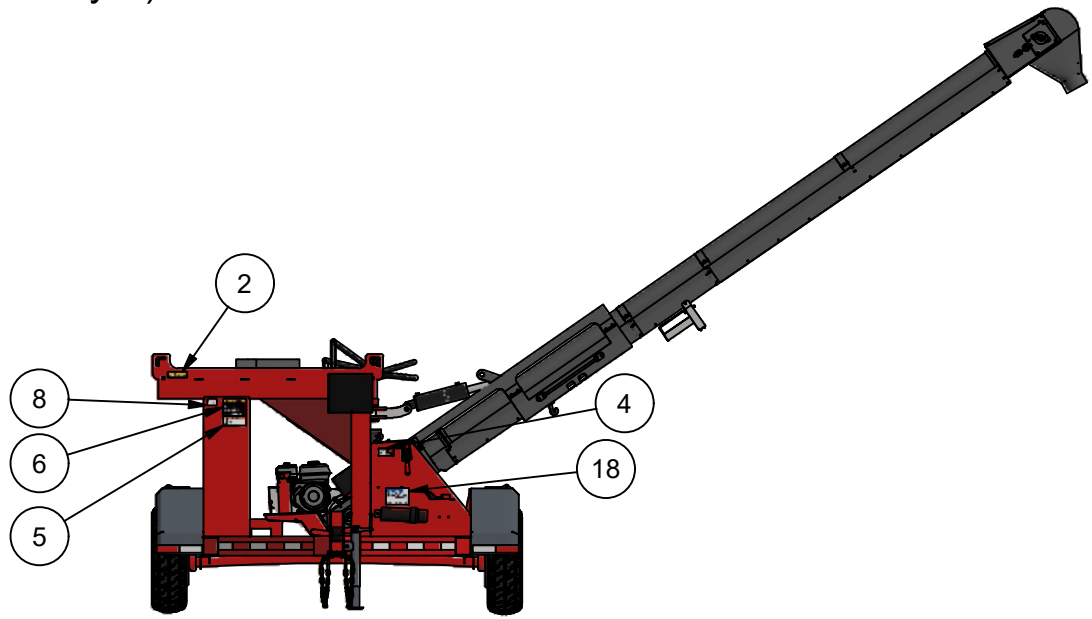

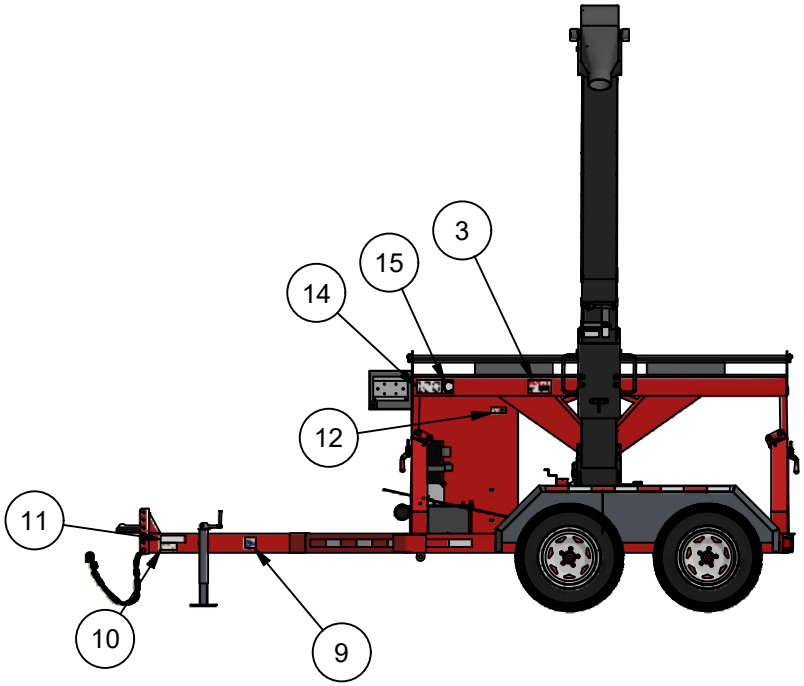

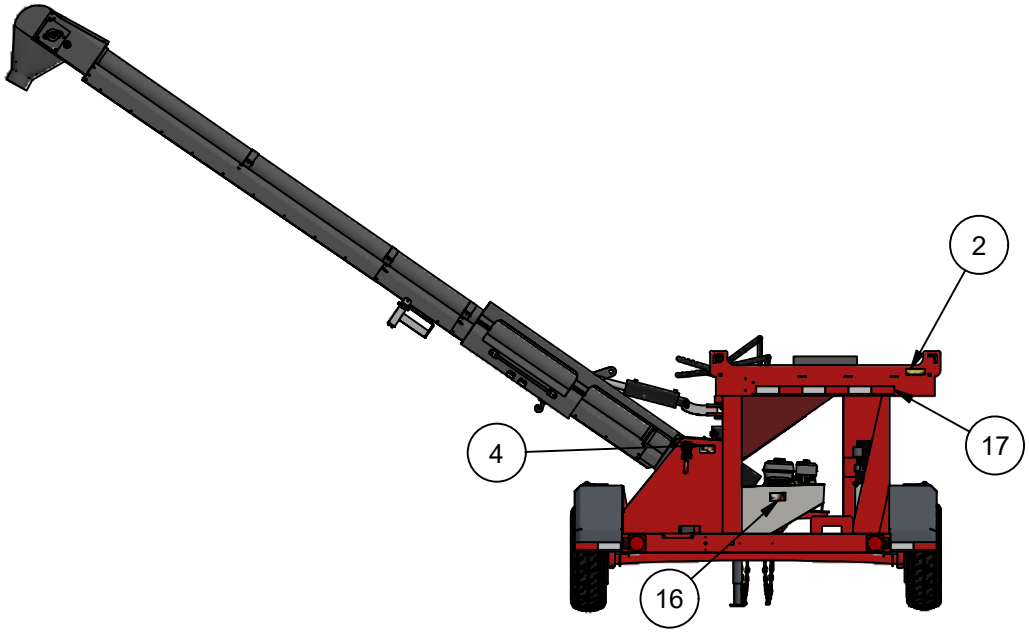

Patriot Equipment
1302 K Road Minden, NE
308-832-0220

100C (2 Box Conveyor) Decals			
ITEM	QTY	PART NUMBER	DESCRIPTION
1	1	ST-100C	2 Box Conveyor Combo
2	2	TS6009	Caution Loading Bags
3	1	TS6013	Danger Auger in Electrical Lines
4	2	TS2012	Single Pinch Point
5	1	BC2515	Hydraulic Oil Warning
6	1	TS6010	Caution Machine Operation
7	2	TS2004	Patriot Decal
8	1	TS2018	P65 California Warning
9	1	NATM	NATM Decal
10	1	Tire Information	Tire Information
11	1	VIN GVWR	VIN GVWR
12	1	TS2003	Serial Number Decal
13	1	TS1006	Slide Style Coupler Bumper Pull
14	2	TS6000	100 Decal
15	2	TS6006	"C" Decal
16	1	CSP152	Pinch Point
17	23	DOT RW Strip	Cut from Bulk
18	1	TS6015	Receiver Power Switch

Patriot Equipment
1302 K Road Minden, NE
308-832-0220

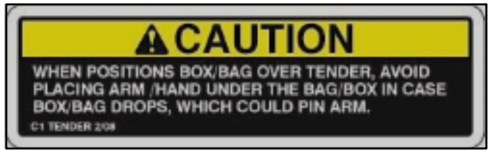

TS6009

TS2003

TS6013

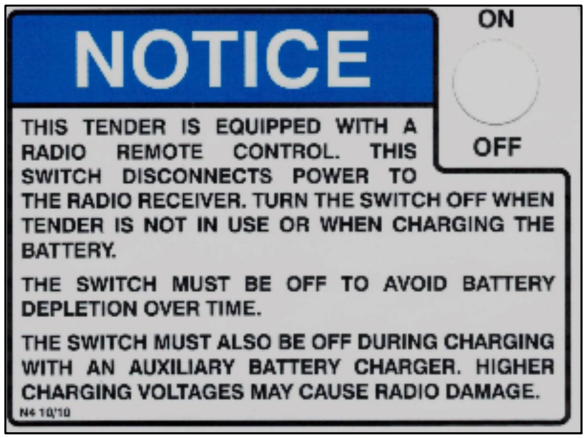

TS6015

TS2012

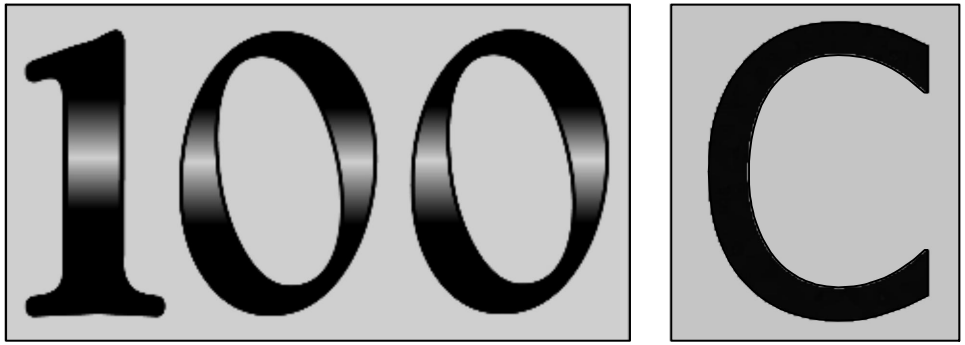

TS6000

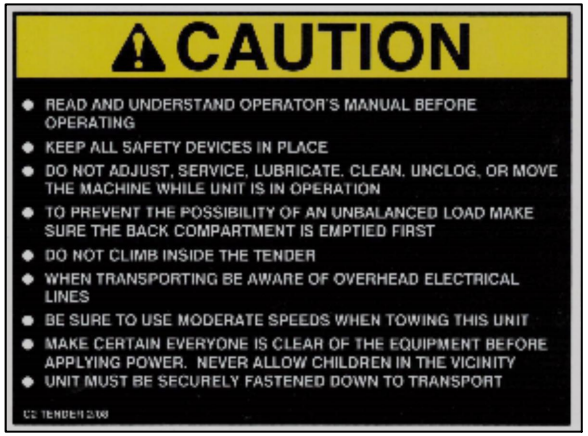

TS6010

TS2004

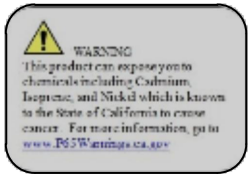

TS2018

Patriot Equipment
1302 K Road Minden, NE
308-832-0220

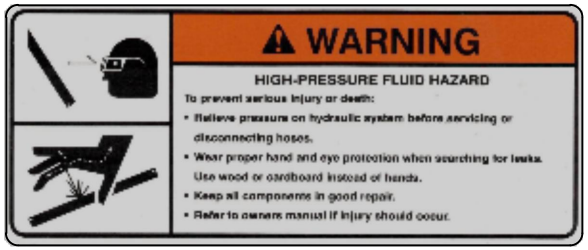

BC2515

DOT Strip

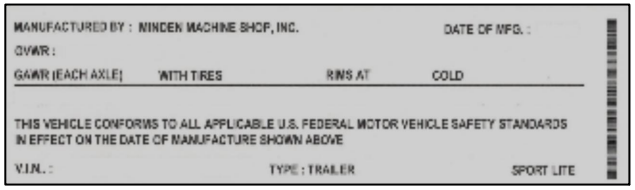

VIN GVWR

NATM

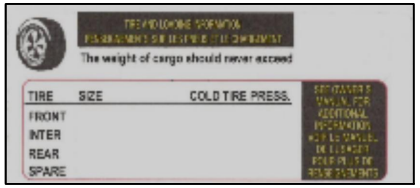

Tire Information

CSP152

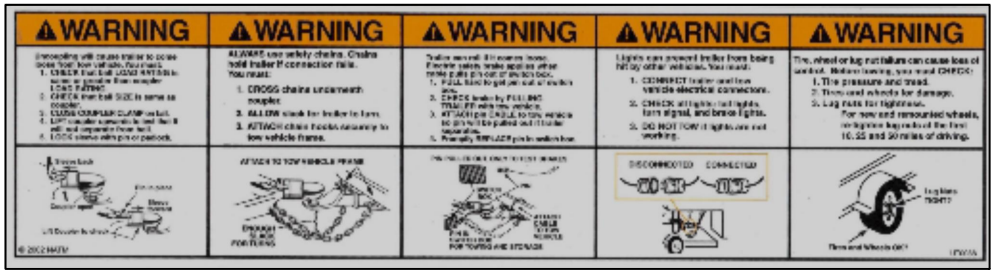

TS1006

Patriot Equipment 1302 K Road Minden, NE 308-832-0220	

ST-100C 2 Box Conveyor Dimensions

Weight: 4,082 lbs. Unloaded

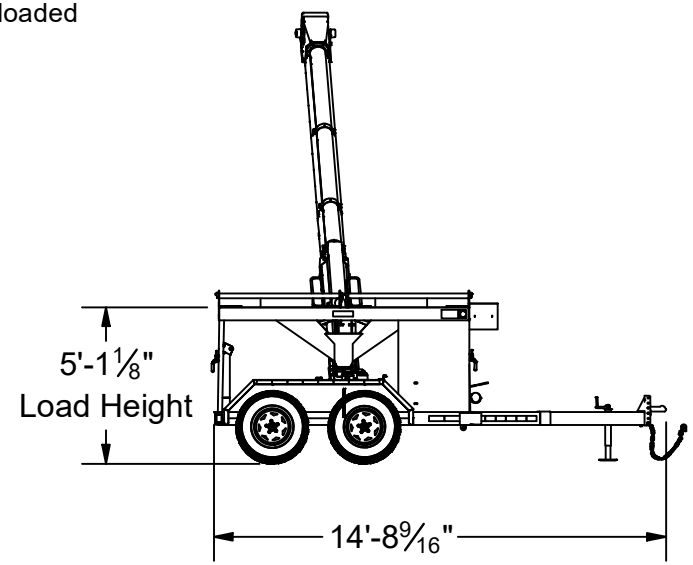

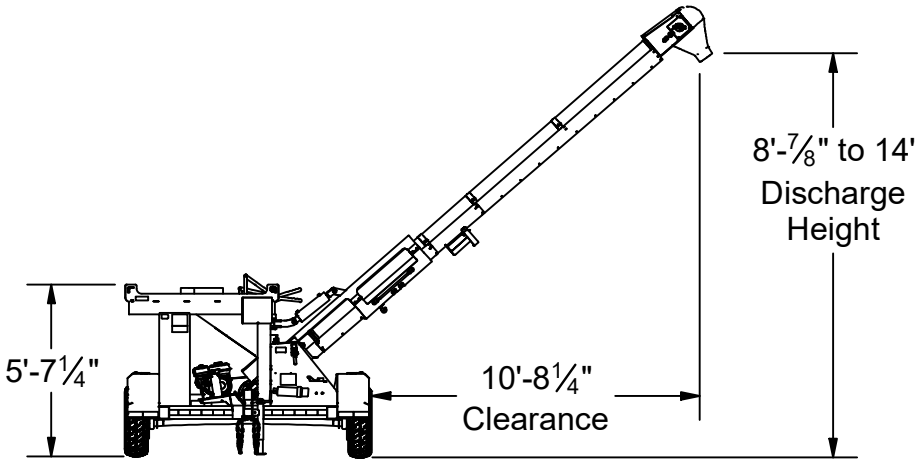

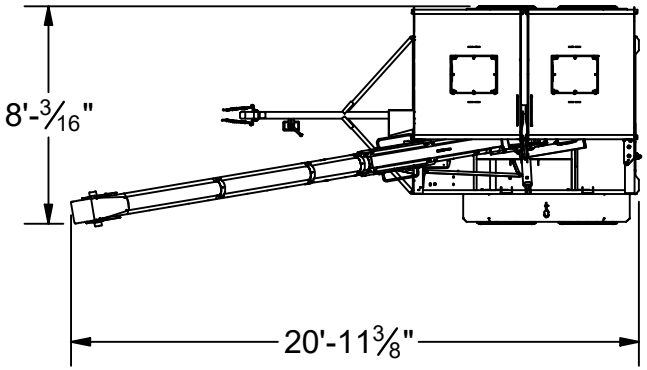

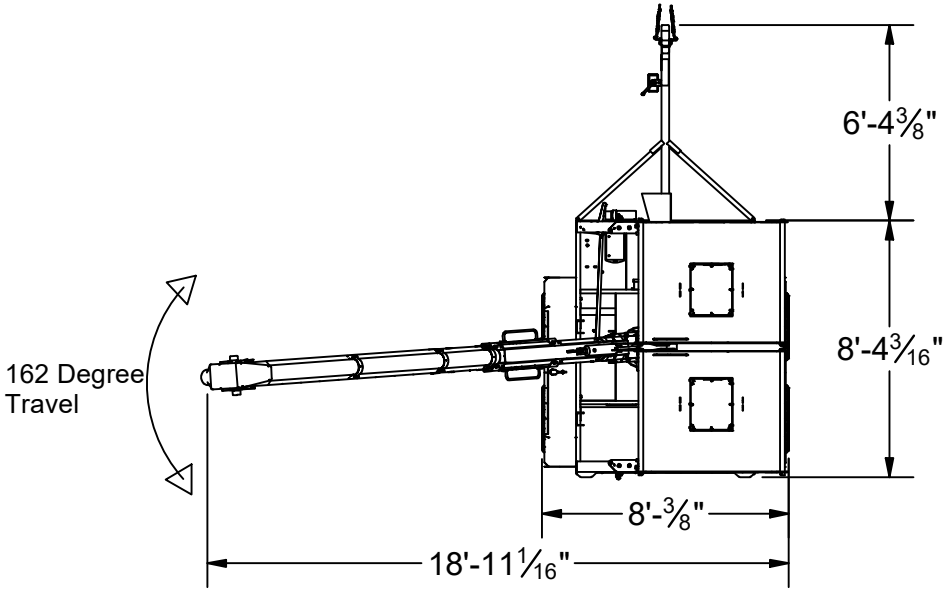

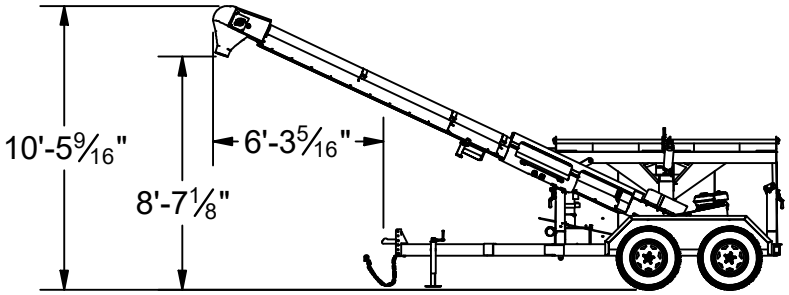

Patriot Equipment
1302 K Road Minden, NE
308-832-0220

Torque Data for Standard Nuts, Bolts, and Capscrews

Tighten all bolts to torques specified in chart unless otherwise noted. Check tightness of bolts periodically, using bolt chart as guide. Replace hardware with some grade bolt.

Note: Unless otherwise specified, high-strength Grade 5 hex bolts are used throughout assembly of equipment.

Bolt Torque for Standard Bolts

	Grade 2		Grade 5		Grade 8	
Bolt Size A	lb-ft	(N.m)	lb-ft	(N.m)	lb-ft	(N.m)
1/4"	6	8	9	12	12	16
5/16"	10	13	18	25	25	35
3/8"	20	27	30	40	45	60
7/16"	30	40	50	70	80	110
1/2"	45	60	75	100	115	155
9/16"	70	95	115	155	165	220
5/8"	95	130	150	200	225	300
3/4"	165	225	290	390	400	540
7/8"	170	230	420	570	650	880
1"	225	300	630	850	970	1310

Torque figures indicated are valid for non-greased or non-oiled threads and heads unless otherwise specified. Therefore, do not grease or oil bolts or capscrews unless otherwise specified in this manual. When using locking elements, increase torque values by 5%.

Bolt Torque for Metric Bolts

	Class 8.8		Class 9.8		Class 10.9	
Bolt Size A	lb-ft	(N.m)	lb-ft	(N.m)	lb-ft	(N.m)
6	9	13	10	14	13	17
7	15	21	18	24	21	29
8	23	31	25	34	31	42
10	45	61	50	68	61	83
12	78	106	88	118	106	144
14	125	169	140	189	170	230
16	194	263	216	293	263	357
18	268	363	..	..	364	493
20	378	513	..	..	515	689
22	516	699	..	..	702	952
24	654	886	..	..	890	1206

Grade or Class value for bolts and capscrews are identified by their head markings.

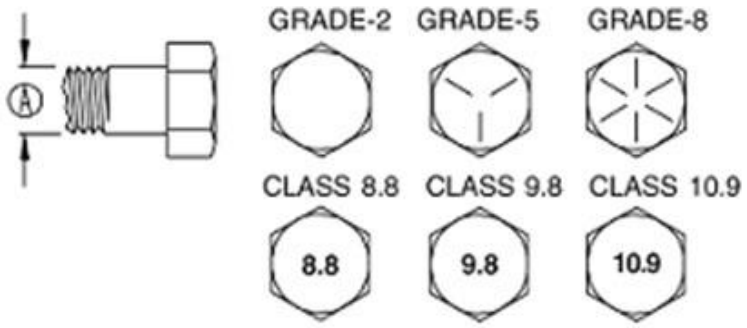

OPERATING PROCEDURES

Operation Recommendations

- One person must be in a position to monitor the operation of the conveyor at ALL times. That person should visually inspect the conveyor before and during operation and be alert to any unusual vibrations, noises, and loosening of any fasteners.
- For smoother startups, keep the conveyor from starting totally full.
- In cold weather, run empty conveyor for five minutes to warm up belt. Otherwise, do not operate the conveyor empty for long periods of time.
- You must "break-in" the conveyor when it is new and at the beginning of each season.
- Make sure the drive end is empty before shutting down the conveyor.
- Shut off power and lockout drive to adjust, service, or clean.

⚠ Do not stop or start the conveyor under load because the belt has a tendency to slip on the drive pulley, especially if the belt and tube have not become polished.

Emergency Shutdown

- If you have to immediately shutdown the conveyor under load, **be sure to disconnect and lockout the power source.**
- Remove as much grain as possible from the hopper and the conveyor before restarting.
- **Never** attempt to restart the conveyor when it is full.
- When as much grain as possible has been cleared from the hopper and the conveyor, reconnect the power source and clear the remaining grain gradually.

⚠ Important: Do not stop and restart the conveyor when it is fully loaded. This may damage the conveyor.

⚠

- Be certain to close ALL clean-out and inspection doors in the main conveyor hopper before operating.
- The operator should not add power before viewing the entire work area and checking that ALL personnel are clear of the designated work area.
- The operator should be alert to any unusual vibrations or noises that might indicate the need for service or repair during the initial startup and break-in period.
- The operator should regulate the grain flow to the main conveyor by controlling the amount of grain fed into the hopper. Avoid plugging the main conveyor by overfeeding the hopper.
- Be certain that all safety shields and devices remain in place during operation.
- Ensure that hands, feet, and clothing are kept away from moving parts.
- Stop the motor and lockout the power source whenever the equipment must be serviced or adjusted.

Start-up and Break-In

- Any conveyor that is new or has set idle for a season needs to go through a “break-in” period.
- Engage the Conveyor at a slow RPM to minimize shock loads.
- Do not allow the conveyor belt to “load up” at a low speed. If this occurs, high torque must be used to turn the belt and this can damage the conveyor.
- Run the conveyor at partial capacity until several hundred bushels of grain have been conveyed and the belt and tube are polished.
- Retighten belt to restore original belt tension.
- When the belt and tube are polished and smooth, slowly work up to the recommended speed and run the conveyor at full speed.

BULK SEED TENDER INSTALLATION

Caution!

- Because the center of gravity is much higher with a loaded tender on a truck bed, additional care should be taken in the way the truck is driven and parked.
- If the tender is to be used in hilly country, do not unhitch a loaded or partial loaded tender as it could roll away and cause it to flip.
- The unit should sit evenly and squarely on the bed of the truck or trailer. It may be necessary to also block the base to keep it from moving around.
- When transporting, keep in mind the conveyor extends forward, be aware of objects to tall in the towing vehicle. Use caution when passing oncoming traffic or going near obstructions like wires or doors.

OPERATING GUIDELINES

The Patriot Seed Tender is designed to safely and efficiently transport bulk seed to the field to be filled into your planter or drill. Following all safety and operating guidelines should ensure many years of safe and affordable use.

PRE-OPERATION CHECKLIST

When operating this unit for the first time and each time you use it, the following information should be reviewed.

- Make sure the unit is secured to a base and will not slide or roll off.
- Make sure lids are properly latched.
- Make sure the shields are properly installed.
- Make sure the conveyor is secure before transporting.
- Make sure the throttle cable is free from tangles.
- Make sure you understand the operation of the gas engine.
- Carefully study and understand this manual.
- Do not wear loose-fitting clothing which may catch in moving parts.
- Always wear protective clothing and appropriate shoes.
- It is recommended that suitable protective hearing and eye protection be worn.
- The operator may come in contact with certain materials which may require specific safety equipment, relative to the handling of such materials (examples: extremely dusty, molds, fungus, bulk fertilizers, etc.).
- Keep wheel lug nuts or bolts tightened to specified torque.
- Assure that the tires are inflated evenly and to the proper PSI.
- Give the unit a visual inspection for any loose bolts, worn part or cracked welds, and make necessary repairs. Follow the maintenance safety instructions included in this manual.
- Be sure there are no tools lying on or in the equipment.

- Do not use the unit until you are sure that the area is clear, especially of children and animals.
- Because it is possible that this equipment may be used in dry areas or in the presence of combustibles, special precautions should be taken to prevent fires and firefighting equipment should be readily available.
- Don't hurry the learning process or take the unit for granted. Ease into it and become familiar with your new equipment.
- Practice operation of your seed tender and its attachments. Completely familiarize yourself and other operators with its operation before using.
- Do not allow anyone to stand between the tongue or hitch and the towing vehicle when backing up to the equipment.
- Securely attach the unit to the towing vehicle using the appropriate ball with the proper rating and always use safety chains.

DURING OPERATION

- Beware of bystanders, **PARTICULARLY CHILDREN!** Always look around to make sure it is safe to start the engine of the unit or the towing vehicle to move the seed tender.
- **NO PASSENGERS ALLOWED**- Do not carry passengers anywhere on, or in, the equipment.
- Keep hands and clothing clear of moving parts.
- Do not clean, lubricate, or adjust your seed tender while the motor is running.
- When halting operation, even periodically, set the towing vehicles breaks, disengage the PTO and shut off the engine, and remove the ignition key.
- Be especially observant of the operating area and terrain – look for holes, rocks or other object that may cause you to trip and fall. Always inspect area prior to operation.
- Pick the most level as possible route when transporting across fields. Avoid the edges of ditches or gullies and steep hillside.
- Maneuver the Seed Tender at safe speeds.
- Avoid overhead wires or other obstacles. Contact with overhead lines could cause serious injury or death.
- Allow for the units length when making turns.
- Do not walk under or work on raised components or attachment unless securely positioned and blocked.
- Keep all bystanders, pets and livestock clear of the work area.
- Never leave running equipment unattended.
- As a precaution, always recheck the hardware on the equipment following every 100 hours of operation. Correct all problems. Follow the maintenance safety procedures.

OPERATING PROCEDURE

1. Start motor (see motor manual)
2. Throttle/Clutch control should be in neutral.
3. Move telescopic spout above target.
4. Activate the conveyor by pushing the up arrow button on the keyfob at the end of the spout. This in turn will cause the gas motor to increase in speed engaging the centrifugal clutch attached to the motor. When the desired RPM has been attained let go of the green button.
5. Before container is completely filled, return engine to idle by pressing the down arrow button on the keyfob until the conveyor stops turning, as some product may be in the spout.
6. Move to next target and repeat process.
7. When finished empty conveyor on the last box, shut off engine and latch conveyor.
8. Put fuel lever in "off "position prior to transporting the unit.

SHUTDOWN

Normal Shutdown

When shutting down the conveyor to ready for transportation, make certain that the hopper and conveyor are empty before stopping the unit. Before positioning the conveyor, the power source needs to be turned off.

Emergency Shutdown

- If you have to immediately shutdown the conveyor under load, **be sure to disconnect and lockout the power source.**
- Remove as much grain as possible from the hopper and the conveyor before restarting.
- **Never** attempt to restart the conveyor when it is full.
- When as much grain as possible has been cleared from the hopper and the conveyor, reconnect the power source and clear the remaining grain gradually.

LOCKOUT

The conveyor must be stopped and the power source turned off if the operator must leave the work area or whenever servicing or adjusting. Precaution should be made to prevent anyone from operating the conveyor when the operator is absent from the work area or inside the tender.

Conveyor Maintenance

Conveyor Belt Adjustment

Belt tension and tracking will need periodic adjustment. Follow the guidelines under “Tracking the Belt” to make adjustments.

IMPORTANT

BELT ALIGNMENT and BELT TENSION should be checked periodically.
BELT damage will occur if alignment or tension has not been maintained.
BELT tension should be 14 ft. lbs. of torque on adjustment bolts.
BELT should be tracked to be centered on the idle and drive roller.
D-KS-0023

Conveyor Belt Care

- It is recommended that the conveyor belt be washed off and the tail end be cleaned out at the end of the season. This will help prevent material residue from building up and causing damage to the belt.
- In order for water to drain from the conveyor belt, the splice must be parked on the top side of the circuit. To obtain this condition, open the door at the tail end. Run the conveyor until the belt splice appears. Turn off the conveyor immediately. The splice will now be on the top side.

Lubrication

- Winches require the following maintenance:
    - All gears must be covered by a film of grease at all times.
    - The nut holding the handle assembly must be tight.
    - The two (2) bushings found at the end of the drum shaft, the ratchet pawl, and the bushing at the ends of the pinion shaft should be wet with oil.
    - The teeth of the ratchet lock should be sharp, and not worn, so they can hold the load.
- Bearings (25 Hr. Interval)
    - Lubricate four (4) bearings on belt drive/idler rollers.
- Use a good quality lithium soap base E.P. grease meeting the N.L.G.I. #2 specifications and containing no more than 1% molybdenum disulfide to lubricate all fittings (Example: Shell super duty or equivalent.)

Troubleshooting

Problem	Possible Cause	Solution
The conveyor is vibrating	A. Damage can occur to the belting causing a noise. Damage usually is caused from foreign material being run through the conveyor B. The belt is not tracking in the center of the conveyor	A. It may be necessary to remove the belting for inspection. B. Track the belt
Capacity is too low	A. There may not be enough grain reaching the conveyor B. Conveyor belt is moving too slow.	A. Make sure the intake has not bridged over, restricting flow. The belt needs to be covered to achieve maximum capacity. B. Check the belt speed. Low capacity will result from speeds slower than recommended. B2. Belt needs tightening
The conveyor plugs	A. The conveyor may be "jamming" because too much grain is reaching the conveyor. B. The grain may be wet. C. The conveyor may be jammed with foreign material. D. The discharge end may be plugged. E. Pulley has spun out and burned into the belt in two.	A. Decrease the amount of grain the conveyor is gathering. B. If wet grain or other hard to move materials is being conveyed, reduce the amount of grain being fed into hopper. C. Remove any foreign material in the conveyor. D. Unplug any plugs at the discharge end of the conveyor. E. Cut and resplice the belt. An additional piece of belting may be required. Tighten and retrack the belt.
Cleated belt is slipping or loose	A. Belt tension too low. B. Belt is extremely dirty.	A. Tension belt to 10-13 ft. lbs. on the adjustment bolts. B. Clean traction side of belt.
Cleated belt is rubbing side of housing or cleats are coming loose or wearing.	A. Belt misaligned.	A. Align Belt so it tracks center of idle and drive rollers.
Excessive damage.	A. Belt speed too slow. B. Belt misaligned.	A. Run belt at 400 fpm. (Belt splice passes every 6 seconds.) B. Align belt so it tracks center of idle and drive rollers.

Tracking the Belt

1. Basic rule: ***the belt moves toward the end of the roller that it contacts first.***
2. Rollers must be square with the housing and parallel to each other.
3. Belt tension must be great enough to prevent slippage, tension to10-13 ft.-lbs. on adjustment bolts.

Caution: Make sure everyone is clear of machine before running.

4. Run the conveyor. Check to see that the belt runs centered on the drive roller. Turn off the machine. Adjust drive roller if necessary.

Warning: Do not run the machine while adjusting. Failure to heed may result in personal injury or death.

5. To adjust drive roller, loosen the four nuts on the bearing holder plate, and the jam nut on the threaded adjuster. Retighten after adjusting is complete.

Caution: Make sure everyone is clear of machine before running.

6. Run the machine for two minutes. Make sure belt runs centered on drive pulley.
7. Open the Tail End Door to view the idler.
8. Run the machine. Check to see that the belt is running centered on the idler roller. Turn the machine off.

Warning: Do not run the machine while adjusting. Failure to heed may result in personal injury or death.

9. If adjustment is necessary, adjust the tensioning bolts on the idler housing to 10-13 ft.-lbs. torque.
10. Check adjustment by running the machine. Make sure belt runs centered on idler pulley. The clearance between the belt and the housing should be the same on both sides.
11. Close the Tail End Door when complete.

Please see the Owner/Operator Manual for:
KSI Conveyors, Inc.
Model 080617 Minden Conveyor at:

https://patriotequip.com/manuals/

or scan below:

HIGHWAY AND TRANSPORT OPERATIONS

1. Always drive at a safe speed relative to local conditions and ensure that your speed is low enough for an emergency stop to be safe and secure. Keep speed to a minimum.
2. Reduce speed prior to turns to avoid the risk of overturning.
3. Avoid sudden uphill turns on steep slopes.
4. Always keep towing vehicle in gear to provide engine braking when going downhill. Do not coast.
5. Do not drink and drive.
6. Comply with state and local laws governing highway safety and movement of farm machinery on public roads.
7. Use approved accessory lighting, flags, and necessary warning devices to protect operators of other vehicles on the highway during daylight and nighttime transport.
8. The use of flashing amber lights is acceptable in most localities. However, some localities prohibit their use. Local laws should be checked for all highway lighting and marking requirements.
9. When driving the equipment on the road or highway under 20 MPH at night or during the day. Use flashing amber warning lights and slow moving vehicle (SMV) identification emblem.
10. Plan your route to avoid heavy traffic.
11. Be a safe and courteous driver. Always yield to oncoming traffic in all situations, including narrow bridges, intersections, etc.
12. Be observant of bridge load ratings. Do not cross bridges rated lower than the gross weight at which you are operating.
13. Watch for obstructions overhead and to the side while transporting.
14. Always operate equipment in a position to provide maximum visibility at all times. Make allowances for increased length and weight of the equipment when making turns, stopping the unit, etc.

WARNING: **TIRE SAFETY**

1. Failure to follow proper procedures when mounting a tire on a wheel or rim can produce an explosion which may result in serious injury or death.
2. Do not attempt to mount a tire unless you have the proper equipment and experience to do the job
3. Inflating or servicing tires can be dangerous. Whenever possible, trained personnel should be called to service and/ or mount tires.
4. Always order and install tires and wheels with appropriate capacity to meet or exceed the anticipated weight to be placed on the equipment.

TRANSPORTING SEED TENDER

DANGER: Do not transport Seed Tender at speeds in excess of 50 MPH and comply with your state and local regulations governing marking, towing and maximum width. Observe safe driving and operation practices.

DANGER: OVERHEAD ELECTRICAL LINES/OBSTRUCTIONS

DANGER: Be alert to overhead obstructions and electrical wires. Failure to do so may result in electrocution. Always lower the conveyor into the stowed position before moving. Maintain at least ten (10) feet of clearance. See the dimensions chart showing the height of the conveyor in the up position. Check the chart to determine the height of you conveyor. Make certain everyone is clear of the work area before moving.

Maintenance

WARNING!

1. WARNING Keep all safety shields and devices in place. Never clean, adjust or lubricate a machine that is in operation.
2. Make sure there is plenty of ventilation. Never operate the engine in an enclosed building. The exhaust fumes may cause asphyxiation.
3. Always use the proper tools or equipment for the job at hand.
4. Honda engine – refer to manual for information on maintenance products and schedules.
5. Cosmetic – any exposed metal where paint or powder has been chipped, gouged, scratched or worn should be lightly sanded, then primed and painted with good enamel paint. If color is hard to match contact Minden Machine Shop Inc.
6. To prevent stone chips on units being pulled by a truck, you should have a set of mud flaps large enough to remedy possible chipping.
7. Bearings should be examined annually for wear and tear.
8. Replace all shields and guards after servicing and before moving.
9. After servicing, be sure all tools, parts and service equipment are removed.
10. Do not allow grease or oil to build up on any step or platform.
11. Never replace hex bolts with less than grade five bolts unless otherwise specified. Refer to bolt torque chart for head identification markings.
12. Where replacement parts are necessary for periodic maintenance and servicing, genuine factory replacement parts must be used to restore your equipment to original specifications. The manufacturer will not claim responsibility for use of unapproved parts and/or accessories and other damages as a result of their use.
13. If equipment has been altered in any way from original design, the manufacture does not accept any liability for injury or warranty.
14. A fire extinguisher and first aid kit should be kept readily accessible while performing maintenance on this or any equipment.

OPERATING & ADJUSTMENT OF VARIABLE SPEED THROTTLE ACTUATOR

The Throttle controller is simple to operate when you keep these few points in mind.

BEFORE STARTING THE ENGINE

1. Always keep the battery fully charged. When storing the unit for an extended period of time such, as over winter, you should remove the battery and store it in a place where it can be trickle charged periodically to keep it on good condition. Note: the battery needs to be charged at the start of the season to ensure that you will not have problems when you are in the field.
2. Check operation of the actuator before starting the engine. To do this press the green and red buttons on the switch and watch the arm move left or right depending on which button is pressed. Make sure that the actuator arm is closest to the motor before starting engine. This will prevent the motor from being at full throttle and discharging product.
3. Make sure that there is no obstruction in the discharge tube.

AFTER STARTING THE ENGINE

1. Once the engine is started, let it warm up for a few minutes before operating the actuator. The engine should idle smoothly with the choke in the “off” position, once the engine has warmed up.
2. Press the green button on the switch.
3. The engine should increase in speed, and the auger should begin to operate.
4. To avoid premature wear of the auger, do not operate the unit empty unless cleaning out the auger.
5. To adjust the top speed of the engine, adjust the top end RPM screw that the throttle lever comes against when at full throttle. If the motor has a rough bouncy top end RPM screw has been adjusted too much. Turn the top end RPM screw clockwise to get rid of the surging.

TROUBLE SHOOTING THROTTLE CONTROL

1. Engine does not come up to speed properly when you press the switch.
    a. Check the battery to see if it is fully charged.
    b. Check electrical connections.
    c. Check for any obstruction at the throttle lever.
    d. Check that the throttle spring is properly adjusted.
    e. If you are at a higher altitude you may have to adjust the carburetor (see engine manual).
2. Nothing happens when you press the switch.
    a. Check that the battery is fully charged.
    b. Check all wire connections and plugs.
    c. Check the switch.

Warning

1. The conveyor should be frequently checked and serviced to operate freely.
2. Keep all guards and shields in place. Replace any that are damaged or lost.
3. The Patriot Seed Tenders are well made and we are proud of our line of equipment. We would like you, as our customer, to do your part in using caution and good judgment in using the equipment as well as any other machinery.
4. Any parts needing replacement should be replaced with parts of the same type and size.
5. Do not modify or alter any of the conveyor components.

GENERAL TRAILER MAINTENANCE

BRAKE ADJUSTMENT

Brakes should be adjusted (1) after the first 200 miles of operation when the brake shoes and drums have "seated," (2) at 3000 mile intervals, (3) or as use and performance requires. The brakes should be adjusted in the following manner.

1. Jack up trailer and secure on adequate capacity jack stands. Follow the recommendations for lifting and supporting the unit. Check that the wheel and drum rotate freely.
2. Remove the adjusting access cover from the adjusting slot on the bottom of the brake backing plate.
3. With a flat blade screwdriver or standard adjusting tool, rotate the star wheel of the adjuster assembly to expand the brake shoes. Adjust the brake shoes out pressure of the linings against the drum makes the wheel very difficult to turn.
   Note: With drop spindle axles, a modified adjusting tool with about an 80 degree angle should be used.
4. Then rotate the star wheel in the opposite direction until the wheel turns freely with a slight lining drag.
5. Replace the adjusting access cover and lower the wheel to the ground. Repeat the above procedure on all brakes.

Caution

Never get under the trailer unless it is resting on properly placed jack stands. Follow the recommendations for lifting and supporting the unit. Do not lift or place supports on any part of the suspension system.

BRAKE CLEANING AND INSPECTION

Your trailer brakes must be inspected and serviced at yearly intervals or more often as use and performance requires. Magnets and shoes must be changed when they become worn or scored, thereby preventing adequate vehicle braking. Clean the backing plate, magnet arm, magnet and brake shoes. Make certain that all the parts removed are replaced in the same brake and drum assembly. Inspect the magnet arm for any loose or worn parts. Check shoe return springs, hold down springs, and adjust springs of stretch or deformation and replace if required.

Caution

ASBESTOS DUST HAZARD!
Since some brake shoe friction materials contain asbestos, certain precautions need to be taken when servicing brakes:

1. Avoid creating or breathing dust.
2. Avoid machining, filing or grinding the brake linings.
3. Do not use compressed air or dry brushing for cleaning. (Dust can be removed with a damp brush).

Inspections

- Inspect front hitch for wear, replace if wear prevents for correct coupling if ball hitch or oblong hole for trailer hitch pin.
- Check the trailer frame for cracks and/or deformities and have them repaired.
- Inspect lights and repair/replace if broken or damaged.
- Check wheel bearings. Repair or replace if loose or damaged.
- Inspect the suspension system for the trailer. Replace damaged or broken springs or axles.

See tire safety section for tire information.

Optional Equipment

Patriot Seed Tender Scale System

Parts List			
ITEM	QTY	PART NUMBER	DESCRIPTION
1	4	load cell assy	Load Cell Assembly for Scale

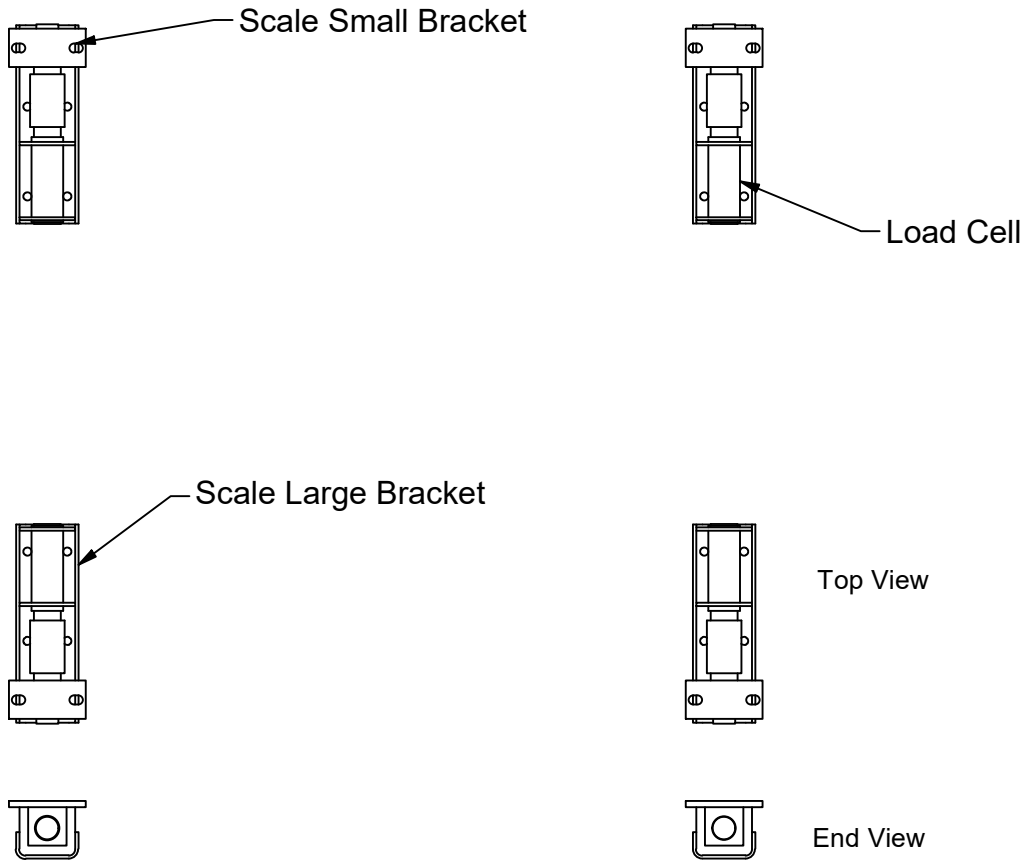

The scale system for the seed tenders begins with the placement of the load cells. The load cells are placed in the corners of the trailer or the deck mount the Patriot Seed Tender is mounted to. The trailer or deck mount will generally have the mounts installed that the load cell's Scale Large Bracket will attach to (unless the scale system is being installed as aftermarket). The four legs of the Patriot Seed Tender are then attached to the small brackets of the load cells. The wires are routed after the Patriot Seed Tender is in place. Please refer to the scale manual for instructions to connect wires and program the scale.

Minden Machine Shop Inc.
1302 K Road Minden, NE
308-832-0220

Quicktach Auger Brackets

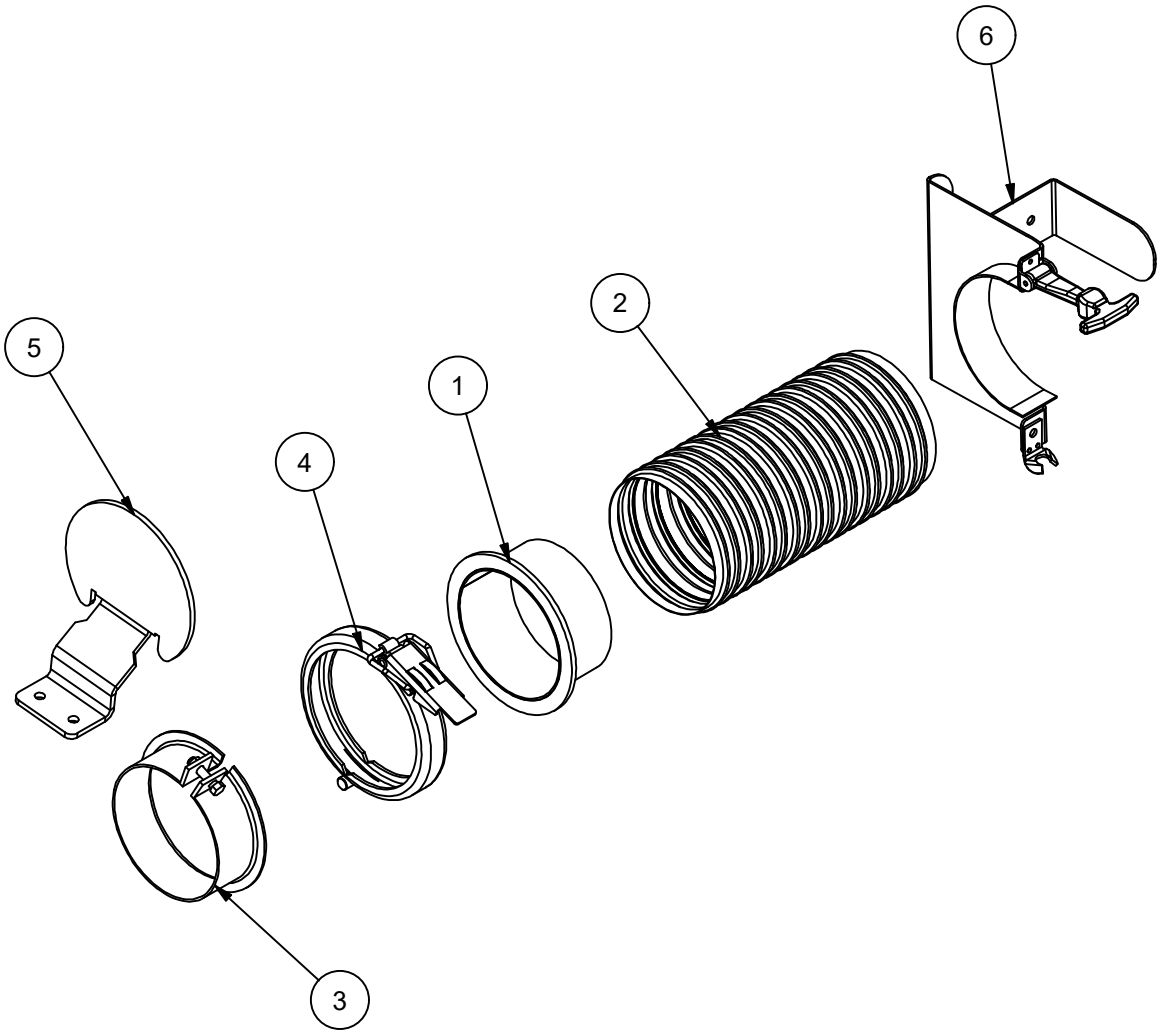

6" QT Auger Parts List			
ITEM	QTY	PART NUMBER	DESCRIPTION
1	1	ST-CP-A0043	Circle Lock 6IN Ring Asmbly
2	1	Flex Tubing Example	Flex Spout
3	1	S5007	6" Bolt On Steel Frame Band
4	1	S5006	6" Circle Lock Ring Clamp
5	1	ST-CP-P0152	QT 6 Upper Bracket
6	1	ST-CP-A0041	6" Leg Mount
8	5	B3/8X1.25	Bolt
9	5	N3/8N	Nut
10	5	W3/8L	Lock Washer
11	1	B1/4X2	Bolt
12	1	N1/4NYL	Nylock Nut

7" QT Auger Parts List			
ITEM	QTY	PART NUMBER	DESCRIPTION
1	1	S5505	7" Lock Ring
2	1	Flex Tubing Example	Flex Spout
3	1	S5507	7" Steel Band
4	1	S5506	7" Lock Ring
5	1	S5510	7" Mount Bracket
6	1	S5509	7" Leg Mount
8	5	B3/8X1.25	Bolt
9	5	N3/8N	Nut
10	5	W3/8L	Lock Washer
11	1	B1/4X2	Bolt
12	1	N1/4NYL	Nylock Nut

Minden Machine Shop Inc.
1302 K Road Minden, NE
308-832-0220

Parts Diagrams

ST-100C 2 Box Conveyor Seed Tender Parts List

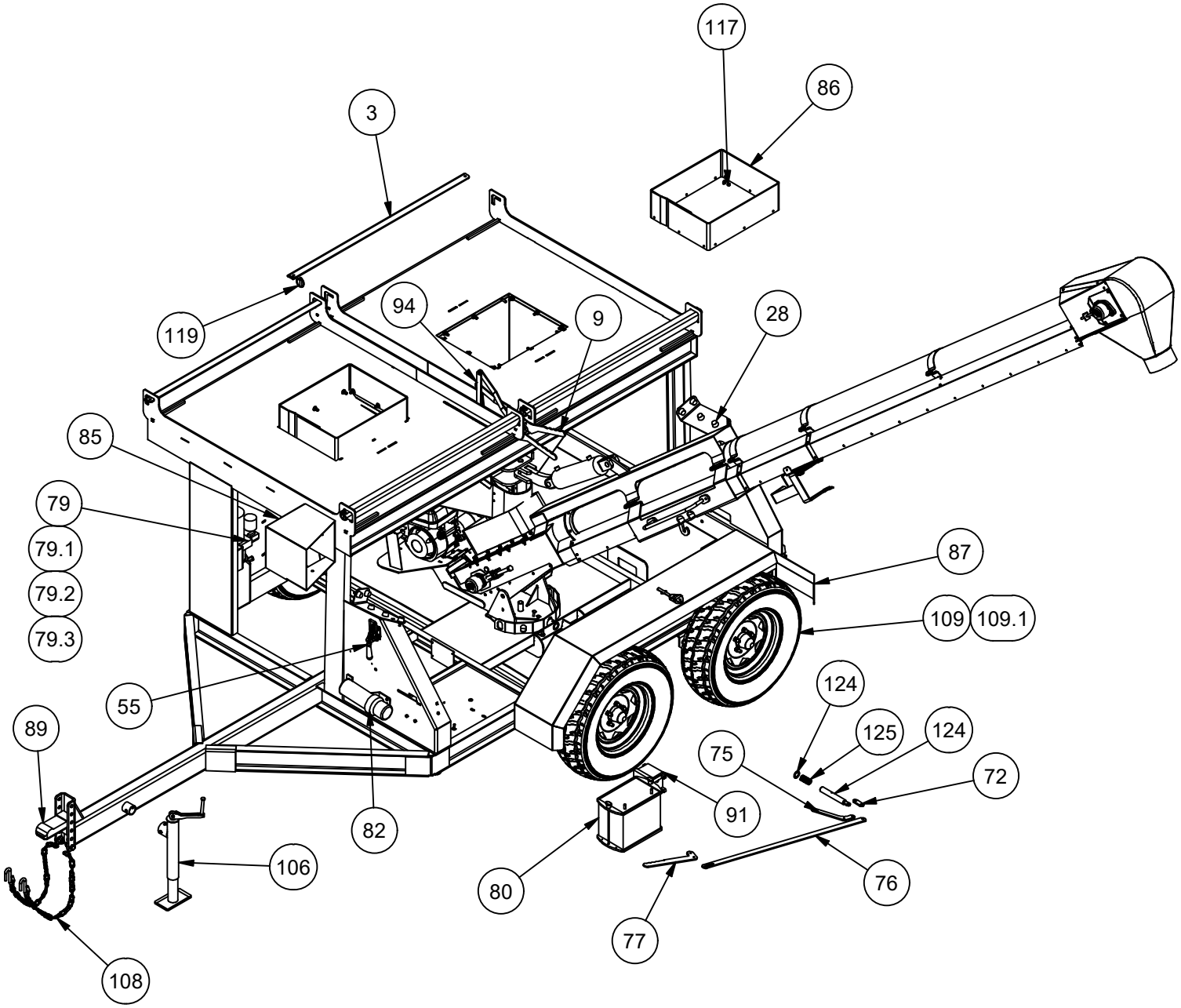

Minden Machine Shop Inc.
1302 K Road Minden, NE
308-832-0220

ST 100 C Parts List			
ITEM	QTY	PART NUMBER	DESCRIPTION
1	1	ST-100C-A0005	2 Box Conveyor Combo
2	2	ST-100C-P0018	2 Box Conveyor Gate
3	4	ST-CP-P0018	Lock Bar
6	2	ST-CP-P0116	Chute Boot
8	1	ST-100C-P0021	Gate Handle
9	1	ST-100C-P0022	Gate Handle Rear
28	10	S4804	Rubber Foot
55	2	S4803	Locking Clamp
72	1	ST-CP-P0111	Pin Link
75	1	ST-CP-P0112	Pull to Pin Link
76	1	ST-CP-P0113	Rotation Drag Link
77	1	ST-CP-P0114	Pivot Lock Handle
79	1	S31035P	Vertical Hyd. Pump Unit
79.1	1	S31035-1	Hyd. Tank
79.2	1	S31035-4	Hyd. Pump Coil
79.3	1	S31035-9	Hyd. Pump Solenoid
80	1	S4000	Battery
80.1	1	S2044	Battery Tray
82	1	TR1590	Manual Holder
85	1	ST-CP-A0053	Scale Head Box
86	2	S2038	Box Seal
87	2	ST-CP-A0046	Fender
89	1	TR115	Trailer Coupler 2-5/16"
91	1	TR1800	Breakaway Battery
93	1	ST-100C-P0042	Tube Mount
94	2	ST-100C-P0041	Gate Link Arm Formed
104	1	TR3005	Left Tail Light
105	1	TR3004	Right Tail Light

ST 100 C Parts List			
ITEM	QTY	PART NUMBER	DESCRIPTION
106	1	TR1600	Topwind 10" Jack
108	2	TR1595	Safety Chain
109	4	TR1095	15" Tire and Rim
109.1	2	TR1040	3500# Axle
110	20	N1/2NYL	Nylock Nut
111	3	PR316x0.5L	Rivet
113	1	ST-CP-P0095	Wire Bracket
114	1	ST-CP-A0038	Belt Shield Conveyor V2
115	32	B5/16x1.0	Hex Bolt
116	42	W5/16F	Flat Washer
117	42	N5/16NYL	Nylock Nut
118	1	TR3002	Right Fender Light
118.1	1	TR3003	Left Fender Light
119	6	PC1003	7/16" x 1-1/2" Lynch Pin
121	2	B5/8x1.5	Hex Bolt
122	2	W5/8F	Flat Washer
123	2	N5/8NYL	Nylock Nut
124	1	ST-CP-A0033	Rotation Lock Pin Weldment
125	1	SP4006	Pivot Point Spring
126	6	B5/16x1.0CB	Carriage Bolt
127	2	B1/4x1	Bolt
128	2	W1/4F	Plain Washer
129	2	N1/4L	Lock Nut

Minden Machine Shop Inc.
1302 K Road Minden, NE
308-832-0220

Seed Tender Conveyor Assembly

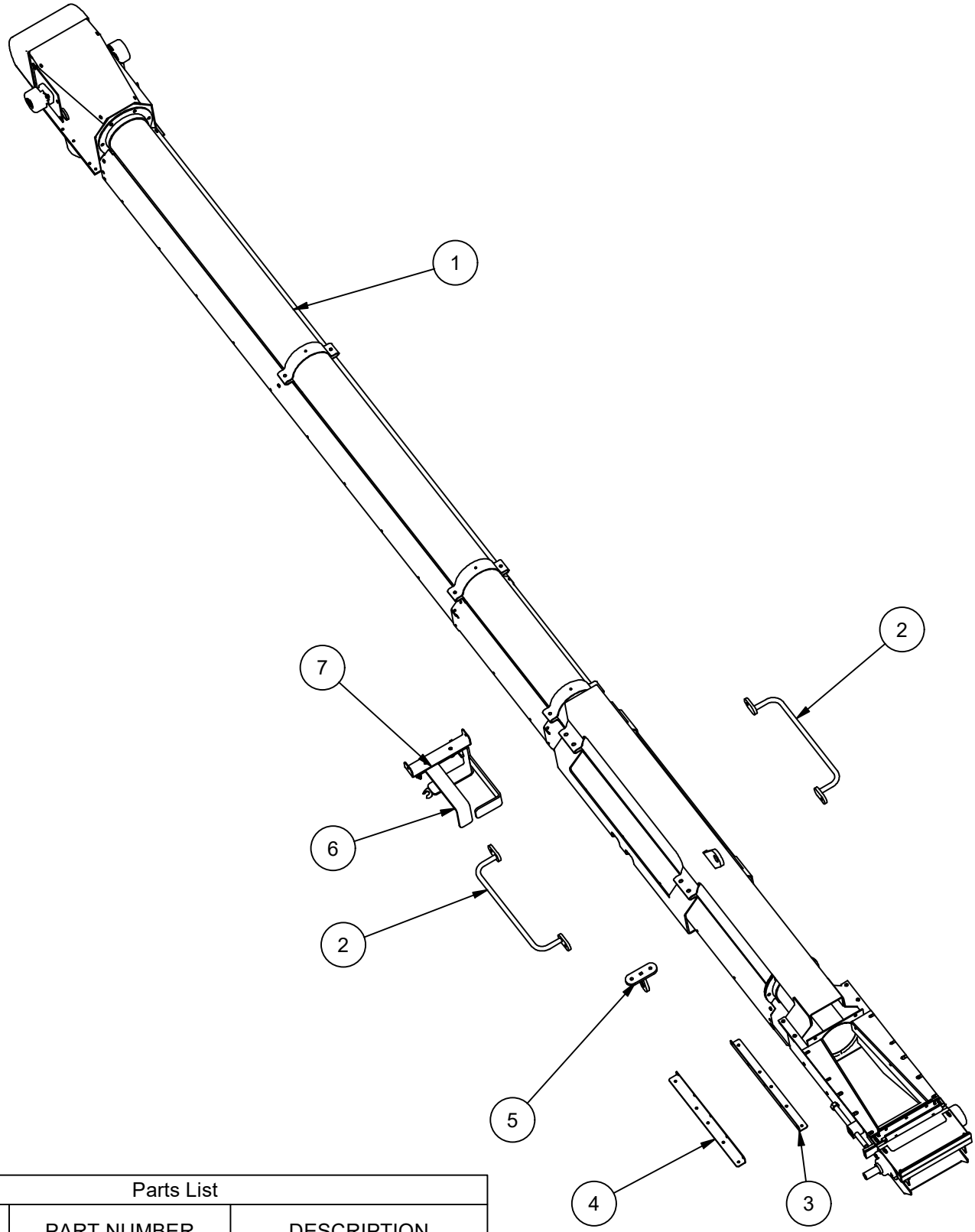

Parts List			
ITEM	QTY	PART NUMBER	DESCRIPTION
1	1	S3000	6"Conveyor Assembly
2	2	ST-CP-A0031	Handle Weldment
3	1	ST-245D-P0059	Angle Flap Mount Front
4	1	ST-245D-P0060	Angle Flap Mount Rear
5	1	ST-CP-A0032	Transport Latch Weldment
6	1	ST-CP-A0036	6IN Spout Mount
7	1	ST-CP-P0132	Spout Mount

Minden Machine Shop Inc.
1302 K Road Minden, NE
308-832-0220

Conveyor Parts List

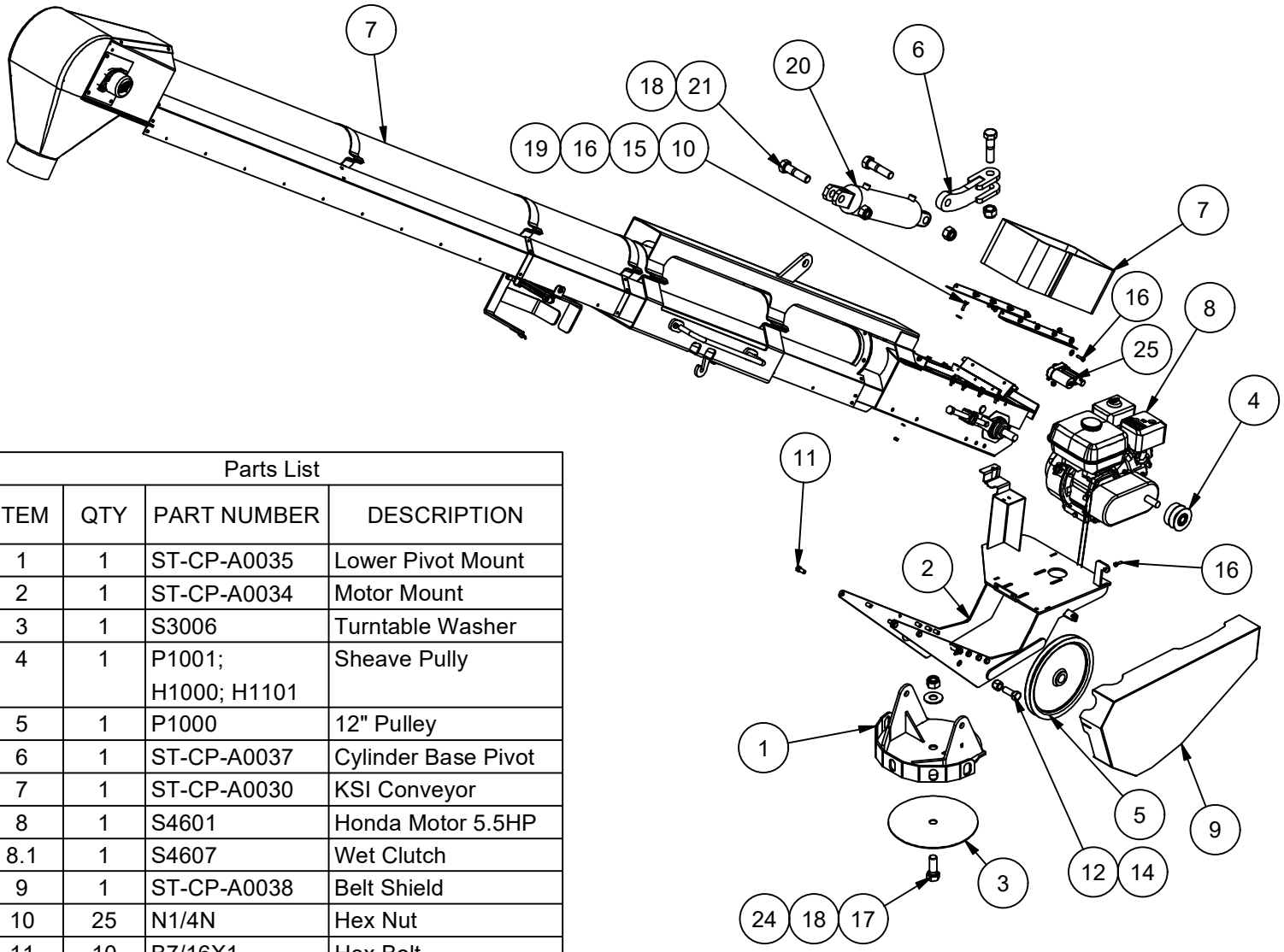

Parts List			
ITEM	QTY	PART NUMBER	DESCRIPTION
1	1	ST-CP-A0035	Lower Pivot Mount
2	1	ST-CP-A0034	Motor Mount
3	1	S3006	Turntable Washer
4	1	P1001; H1000; H1101	Sheave Pully
5	1	P1000	12" Pulley
6	1	ST-CP-A0037	Cylinder Base Pivot
7	1	ST-CP-A0030	KSI Conveyor
8	1	S4601	Honda Motor 5.5HP
8.1	1	S4607	Wet Clutch
9	1	ST-CP-A0038	Belt Shield
10	25	N1/4N	Hex Nut
11	10	B7/16X1	Hex Bolt
12	2	B3/4X2	Hex Bolt
13	2	W3/4F	Plain Washer
14	2	N3/4NYL	Nylock Nut
15	35	W1/4F	Plain Washer
16	27	B1/4X1	Hex Bolt
17	1	W1F	Plain Washer
18	4	N1NYL	1 Std NC Nylock Nut
19	26	W1/4L	Lock Washer
20	1	HCY1015	3.5 x 8 Hyd. Cylinder
21	3	B1x4	Hex Bolt
22	6	B3/8X1	Hex Bolt
23	6	N3/8N	Hex Nut
24	1	B1x2.75	Hex Bolt
25	1	S4103	Motor Actuator
28	1	S2039	Acutator Rod
30	1	S4604	Carb Kit Holder
29	1	S4605	E-Clip
31	1	4mm x 6mm	Actuator Screw
26	1	N5/16NYL	Nylock Nut
27	1	B5/16X1.5	Hex Bolt

Minden Machine Shop Inc.
1302 K Road Minden, NE
308-832-0220

Seed Tender Conveyor
Hydraulic System

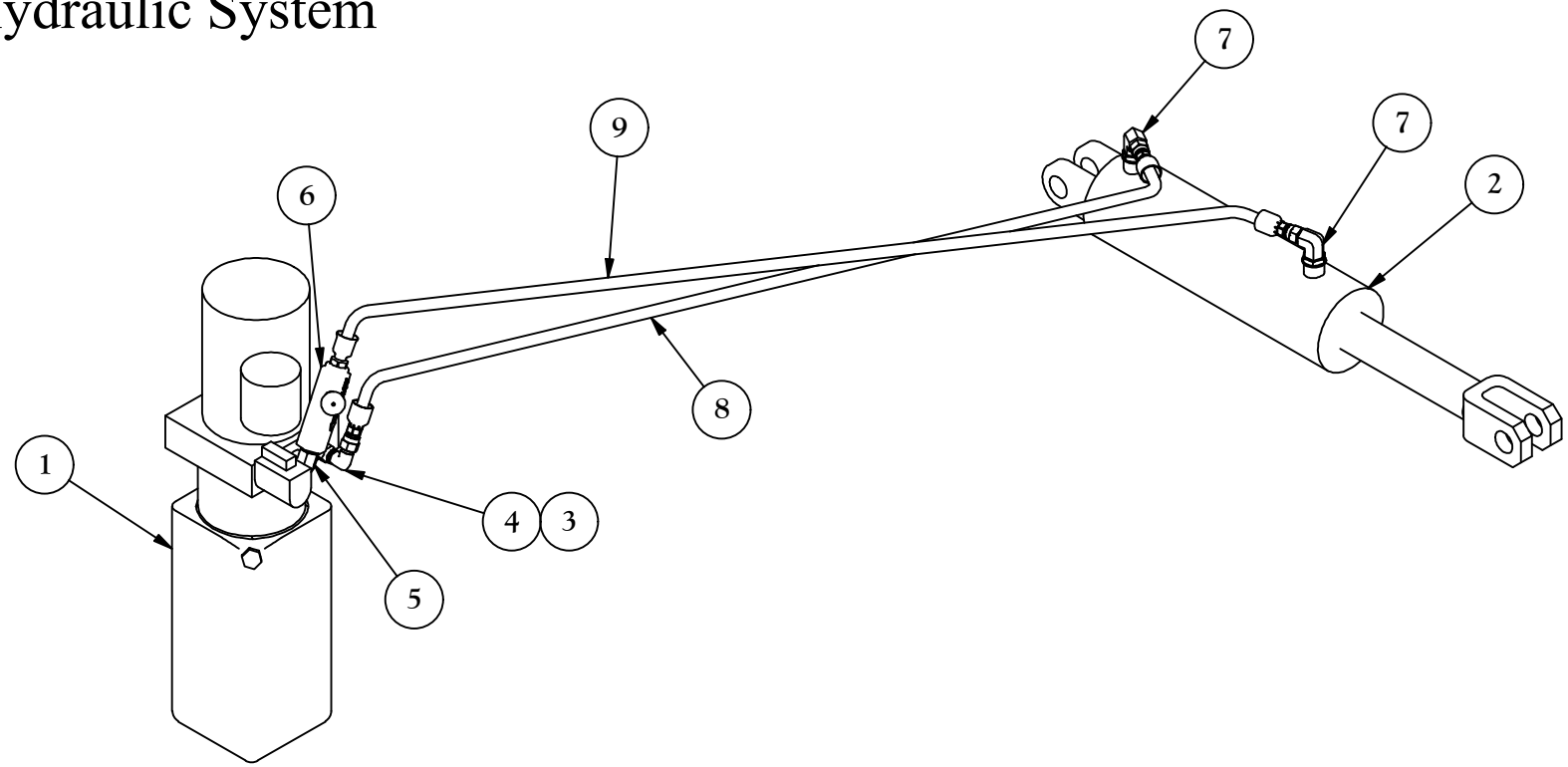

Parts List			
ITEM	QTY	PART NUMBER	DESCRIPTION
1	1	S31035P	Vert. Hyd. Power Unit 12V
2	1	HCY1015	3.5 x 8 Hyd. Cylinder
3	1	6400-6-6	Adapter
4	1	6500 06 06	Adapter
5	1	S3009 (6806 6 6)	Adapter
6	1	S3033	Flow Control
7	2	6801-6-8	Adapter
8	1	ISN04A-606606-11850	Hydraulic Hose Assembly
9	1	S3008-1 (R1604A-606106-12450)	Hydraulic Hose Assembly

Conveyor Cylinder Vent Hose Kit (HCY1020)			
Item	Qty	Part Number	Description
8	1	ISN04A-606606-11850	Hydraulic Hose Assembly
4	1	6500-06-06	Adapter
3	1	6400-6-6	Adapter
7	1	6801-6-8	Adapter

Minden Machine Shop Inc.
1302 K Road Minden, NE
800-264-6587 / 308-832-0220

Seed Tender Flexible Spout Options

6" Flexible Poly Spouts		
Part Number	Length	Description
S5002	4'	Standard spout
S5001	4'10"	Spout with no handle
S5014	4'10"	Spout with handle for Rowe
S5000	7'19"	Spout with no handle
S5012	7'19"	Spout with handle for Rowe

7" Flexible Poly Spouts		
Part Number	Length	Description
S5502	4'	Standard spout
S5501	4'10"	Spout with no handle
S5514	4'10"	Spout with handle for Rowe
S5500	6'16"	Spout with no handle
S5512	6'16"	Spout with handle for Rowe

Minden Machine Shop Inc.
1302 K Road Minden, NE
308-832-0220

Axle Parts

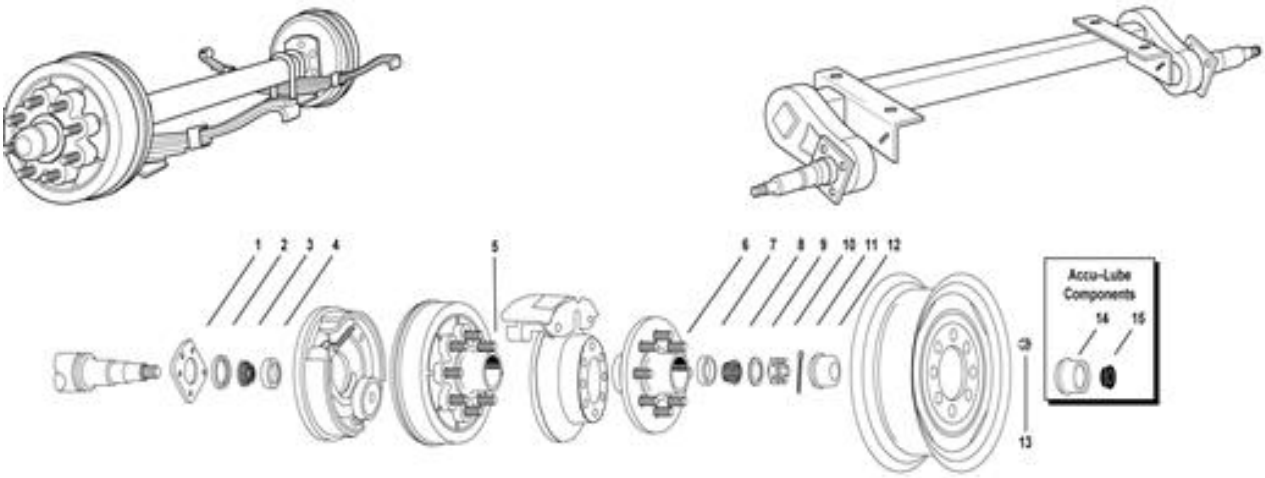

Axle Parts							
Axle Size	Axle PN	Hub	Grease Seal	Inner Bearing	Inner Race	Outer Race	Outer Bearing
3500#	TR1040	5 on 4.5	171255TB	L-68149	L-68111	L-44610	L-44649
6000#	TR1060	8 on 6.5	2233TBN	25580	25520	14276	14125A
7000#	TR1074	8 on 6.5	22333TBN	25580	25520	14276	14125A
8000#	TR1095	8 on 6.5	22333TBN	25580	25520	02420	02475
10000#	TR1096	8 on 6.5	CR27438	28580	28521	25520	25580
12000#	TR1080	8 on 6.5	CR31281	39590	39520	JM205110	JM205149
16000#	TR1092	8 on 275 mm	CR31281	39590	39520	JM205110	JM205149

Axle Parts							
Axle Size	Spindle Washer	Spindle Nut	Cotter Pin	Grease Cap	EZ Lube Cap	Rubber Plug	Cone Wheel Nut
3500#	4753	TR1045	4755	TR1041	TR1044	RP-100	4756
6000#	4753	TR1065	TR1070	TR1064	TR1072	TR1072-1	4756
7000#	4753	4754-12	4755	1605-PL	-	RP-100	4756
8000#	4753	4754-12	4755	1605-PL	-	RP-100	4756-1
10000	4798	4797	CP-3	12011-1	-	-	568216
12000#	47128	47127	CP-3	12011-1	-	-	568216
16000#	47128	47127	CP-3	12011-1	-	-	WN7516PTFEC

Axle Parts			
Axle Size	Brake Drum Back Plate	Brake Drum w/ Bearings/Seal	Brake Set Up
3500#	TR1042 (L, R, 2-1/4"?)	TR1043	-
6000#	TR1062 (L or R)	TR1063	TR1061
7000#	4704-L/4704-R	92865A-1	-
8000#	4739-L/4739-R	90865-GP	-
10000#	4739-L/4738-R	99865-OBE	
12000#	4741-L/4741-R	912865-OBE	-
16000#	4741-L/4741-R	916810-OBE	-

Axle Parts		Axle Parts	
Description	Part Number	Description	Part Number
1/2" Stud 6k Axle	TR1073	9/16-18 Lug Nut	TR1076
9/16" Stud 6K Axle	TR1074	1/2 Stud & Nut	TR1085-1
1/2-20 Lug Nut	TR1075	12 x 2" Brake Pad	TR1071

Minden Machine Shop Inc.
1302 K Road Minden, NE
800-264-6587 / 308-832-0220

ELECTRONICS

Trailer Plug Wiring

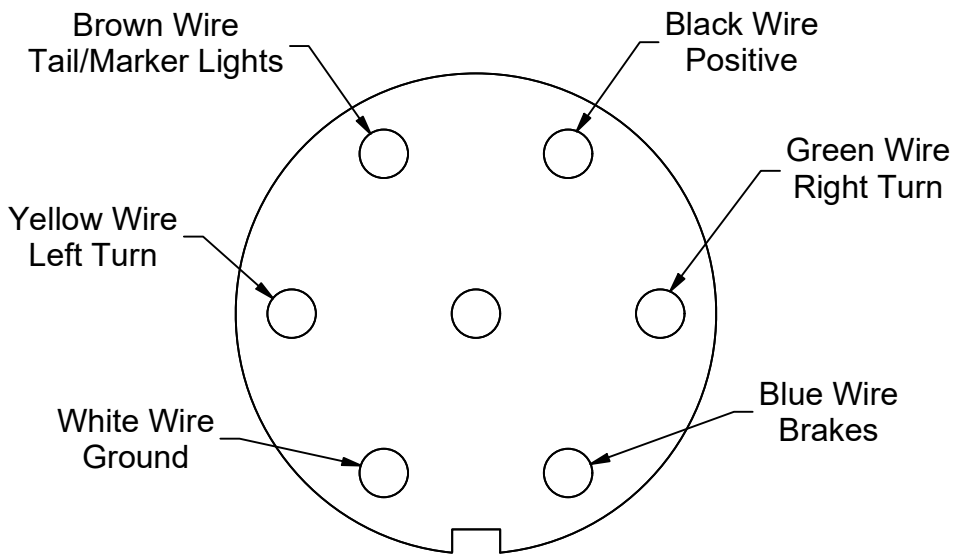

Regular Plug

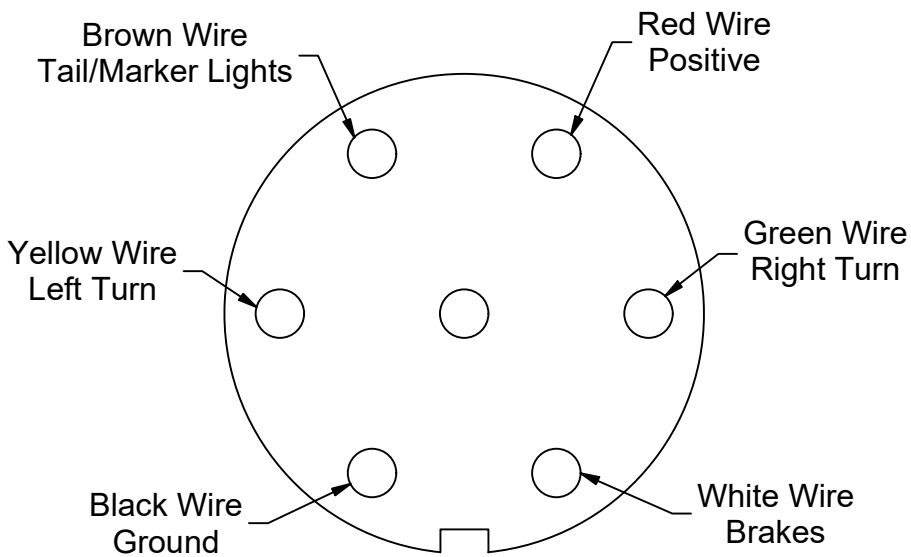

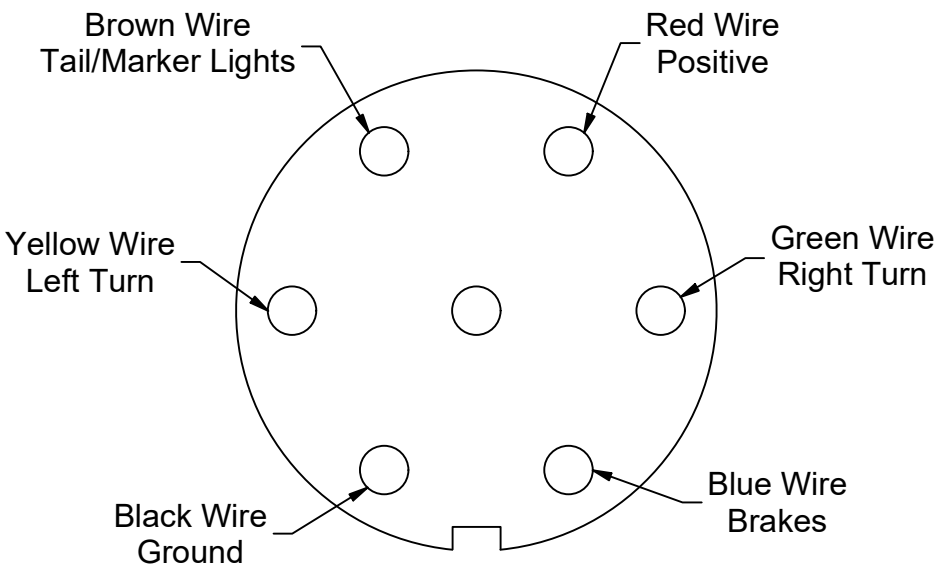

View is looking at the rear of the trailer plug

Trailer plugs are detailed to reflect wire that is available at time of manufacture.

Patriot Equipment
1302 K Road Minden, NE
308-832-0220

Two Box Trailer Harness
PN: TR1810

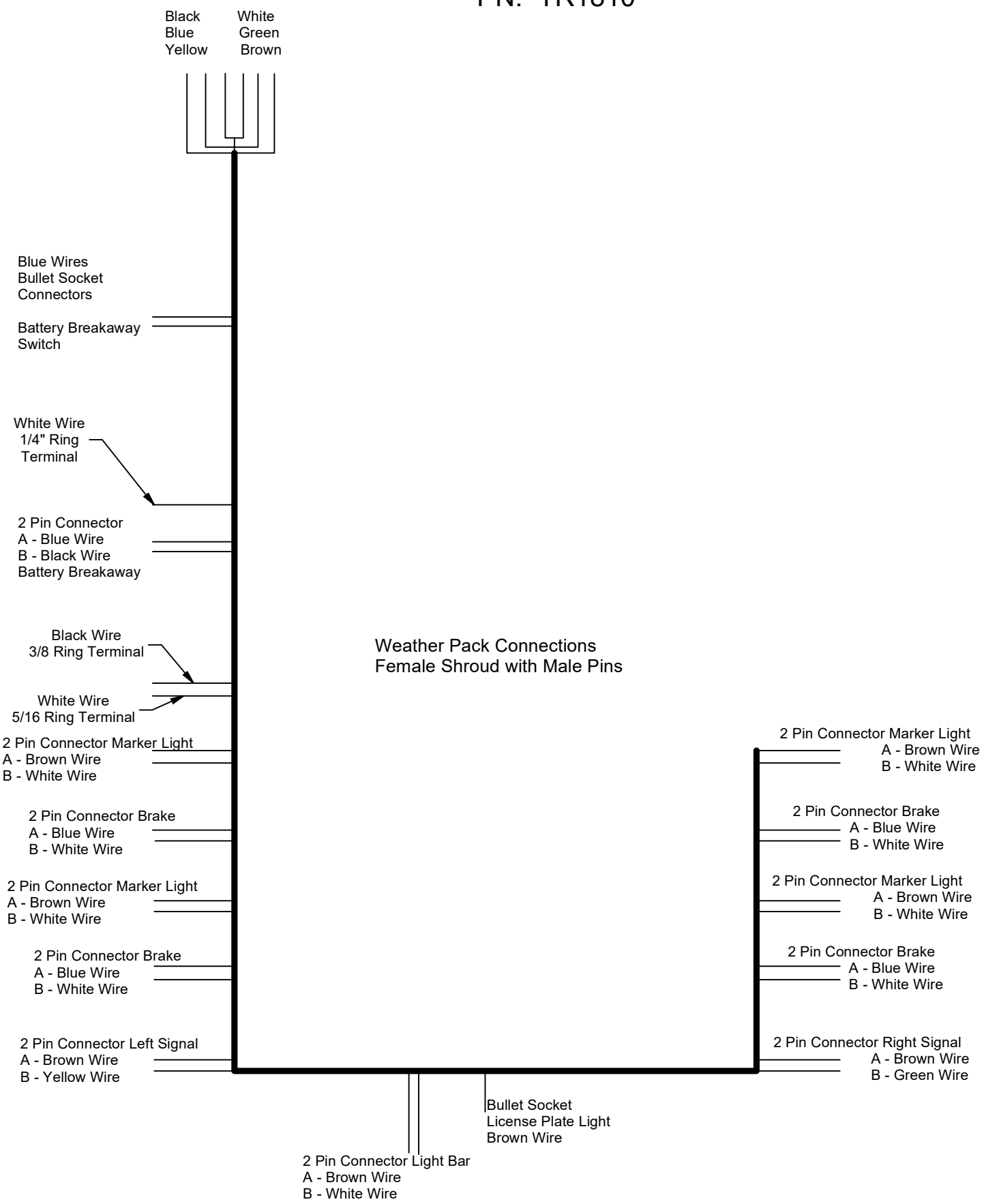

Minden Machine Shop Inc.
1302 K Road Minden, NE
308-832-0220

RE6 Radio Controller Parts

RE6 Part Numbers		
Quantity	Part Number	Description
1	S4520	RE6 Radio Kit Regular
1	S4523	RE6 Radio Only
1	S4528	RE6 Harness Only
1	S4527	RE6 Radio Kit Scale
1	S4529	RE6 Harness Only for Scale
1	S4531	RE6 Radio Kit Scale and Conveyor
1	S4531-1	RE6 Radio Only Scale and Conveyor
1	S4522	RE6 Harness Only Scale and Conveyor
1	S4524	4 Button Key Fob
1	S4530	6 Button Key Fob

Radio Kits Include: Associated RE6 Radio, Harness, and Key Fob

Minden Machine Shop Inc.
1302 K Road Minden, NE
308-832-0220

Rowe Wiring Harness for Conveyor and Scale
PN: S4522

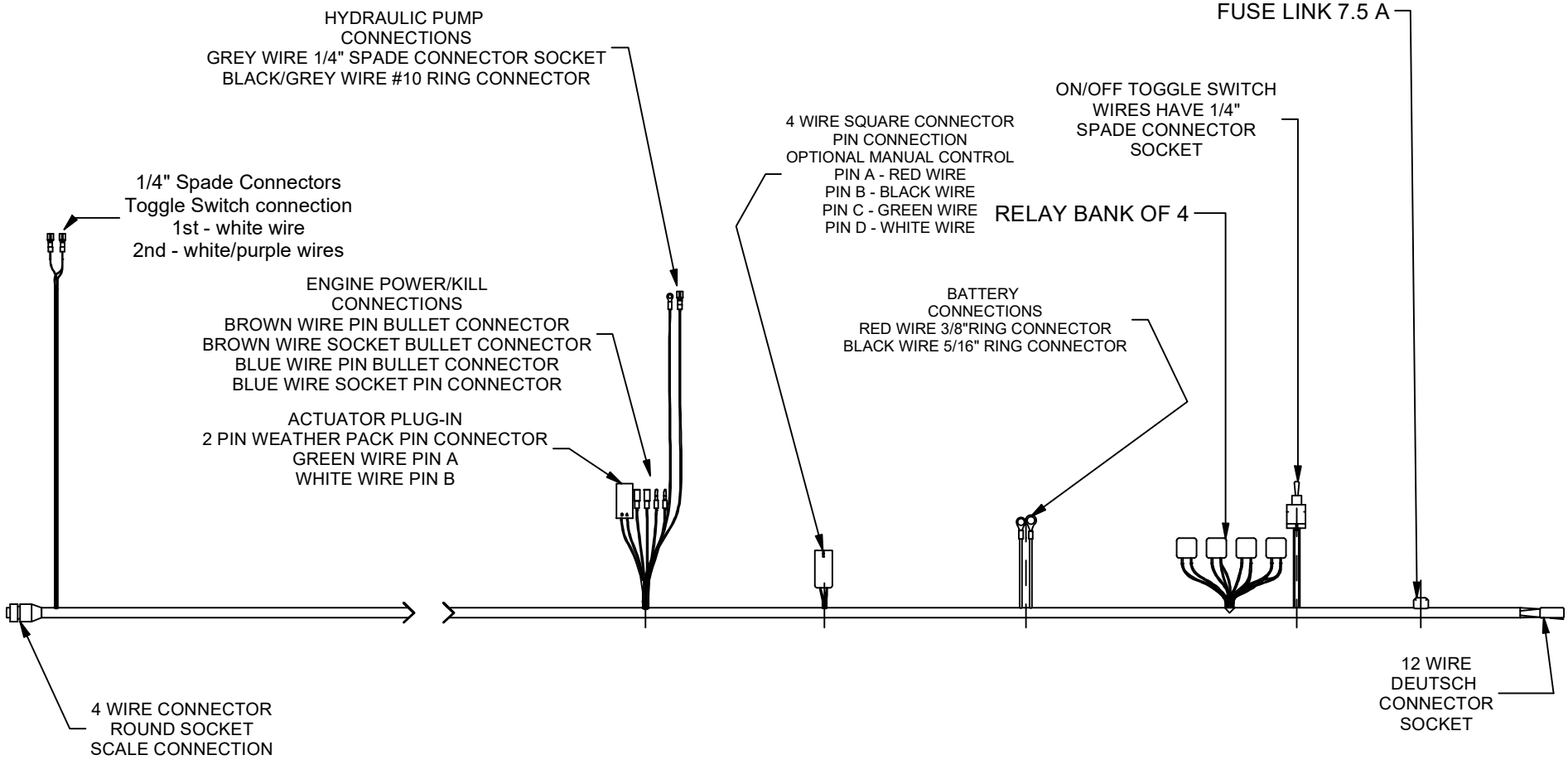

4 Wire Round Connector
(Scale Connector)
1 - Red Wire
2 - Black Wire
3 - Yellow Wire
4 - Open

12 SOCKET DEUTSCH CONNECTOR WIRING

1 - RED WIRE	7 - BLACK WIRE
2 - GREY WIRE	8 - GREEN WIRE
3 - BROWN WIRE	9 - OPEN
4 - BLUE WIRE	10 - YELLOW WIRE
5 - WHITE WIRE	11 - BLACK/WHITE WIRE
6 - OPEN	12 - OPEN

Patriot Equipment
1302 K Road Minden, NE
308-832-0220

Minden Machine Shop Inc
LIMITED WARRANTY

Minden Machine Shop Inc. warrants all products manufactured by it to be free of defect in material and workmanship for a period of one (1) year from the date of purchase.

This Minden Machine Shop Inc. warranty does not cover:

1. Parts and accessories supplied by Minden Machine Shop Inc. but manufactured by others. Minden Machine Shop Inc. will facilitate the other manufacturer warranty for the benefit of the purchaser but will not be bound thereby (example: augers, motors, trailers, tanks, etc.).
2. Products that have been altered by anyone other than a Minden Machine Shop Inc. employee or are used by the purchaser, for purposes other than what was intended at time of manufacture or used in excess of the "built specifications".
3. Products that are custom manufactured by Minden Machine Shop Inc. utilizing the purchaser's design which deviates from Minden Machine Shop Inc. normal production line manufactured or customized features of the products.
4. Malfunctions or damages to the product from misuse, negligence, customer alteration, accidents or product abuse due to incoming material or poor material flow ability or lack of required performance or required maintenance (e.g., poor material flow ability caused by incoming wet fertilizer or hot soybean meal, etc).
5. Loss of time, inconvenience, loss of material, down time or any other consequential damage.
6. Product use for a function that is different than designed intent (e.g., storing soybean meal in grain bin, unacceptable material in the bin such as hot bean meal when product originally designed for other application, etc).
7. Minden Machine Shop Inc is not responsible for any equipment that this product is attached to or mounted on.

To activate this warranty, the purchaser must make contact in writing with Minden Machine Shop Inc. with in one (1) year of date of purchase. After contact, Minden Machine Shop Inc. has the right to determine the cause and qualify the legitimacy of the claim. Minden Machine Shop Inc., upon acceptance of a warranty claim, shall have a reasonable time to plan any repair or replacement and may affect repair or replacement out of its factory or through contract with a local repair service. If a purchaser after warranty notice is made, chooses to make the repair itself, Minden Machine Shop Inc. must approve any expenses before they are incurred to be responsible for customer reimbursement. Minden Machine Shop Inc. shall be liable on a warranty claim for repair or replacement of any defective products and this is the purchaser's sole and exclusive remedy. Minden Machine Shop Inc. will not be liable for any other or further remedy including claims for personal injury, property damage or consequential damage. The law of the Sate of Nebraska shall govern and any such claim and any issues with regard to the same shall be resolved in the Nebraska District Court for the county of Kearney.

RETURN OF MERCHANDISE

Merchandise may not be returned without written approval from the factory. All returns must have a return authorization number. Obtain this number before the return and show it on all return items. A 15% restocking charge is made on merchandise returned. Returned merchandise must be shipped pre-paid.

RECEIVING MERCHANDISE AND FILING CLAIMS

When receiving merchandise it is important to check both the number of parts and their description with packing slip. The consignee must make all claims for freight damage or shortage within 10 days from the date of delivery.

When the material leaves the factory it becomes the property of the consignee. It is the responsibility of the consignee to file a claim on any possible damage or loss. Please list your preferred routing on purchase orders.

MODIFICATIONS

It is the policy of Minden Machine Shop Inc. to improve its products whenever possible and practical to do so. We reserve the right to make changes, improvements and modifications at any time without incurring the obligation to make such changes, improvements and modifications on any equipment sold previously.

WARRANTY REGISTRATION

To register equipment, or file a claim, fill out the appropriate information completely, copy and email it to larry@mindenmachine.com with the subject as EQUIPMENT WARRANTY, or fill it out and fax it to 308-832-1340 or fill the form out and mail to:

Minden Machine Shop, Inc
PO Box 356
Minden, NE 68959

Dealer Information: Not Applicable, check here: [ ]

Dealer Name:

Address:

City:

State:

Zip Code:

Phone #:

Email:

End User Information:

Purchaser:

Address:

City:

State:

Zip Code:

Phone #:

Email:

Equipment:

Serial #:

Date Of Purchase: / /

Equipment:

Trailer Model Number:

Trailer VIN Number:

Date Of Purchase: / /

Dealer Name:

Please fill out the table below with the tire identification numbers located on the tires on the purchased trailer. The tire identification number is the US DOT Tire Identification Number (see pages 41 and 43 of this manual for location of number on the tire).

TIRE IDENTIFICATION NUMBERS

QTY	1	2	3	4	5	6	7	8	9	10	11	12
1												
2												
3												
4												
5												
6												
7												
8												

Please return within 14 days of purchase

WARRANTY CLAIM FILE

Please Describe the Defect:

WIRELESS REMOTE INSTRUCTIONS
WIRELESS REPROGRAMMING INSTRUCTIONS

WARNING!!!!

THE OPERATOR SHOULD NOT ATTEMPT TO REPAIR ANY RADIO CONTROLLER. IF ANY PRODUCT PERFORMANCE OR SAFETY CONCERNS ARE OBSERVED, THE EQUIPMENT SHOULD IMMEDIATELY BE TAKEN OUT OF SERVICE. DAMAGED AND INOPERABLE RADIO CONTROLLER EQUIPMENT SHOULD BE RETURNED TO PATRIOT EQUIPMENT FOR EVALUATION AND REPAIR. FAILURE TO FOLLOW THIS WARNING COULD RESULT IN DAMAGE TO EQUIPMENT.

NOTE: If your Patriot Seed Tender does not have the electric start option, the electric start on button and electric start off button on the remote transmitter will have no function.

Overview:
The RE6 wireless control is designed to provide highly dependable, consistent wireless performance. Aside from battery replacement, the units are practically maintenance free and built with quality components for durability and reliability.

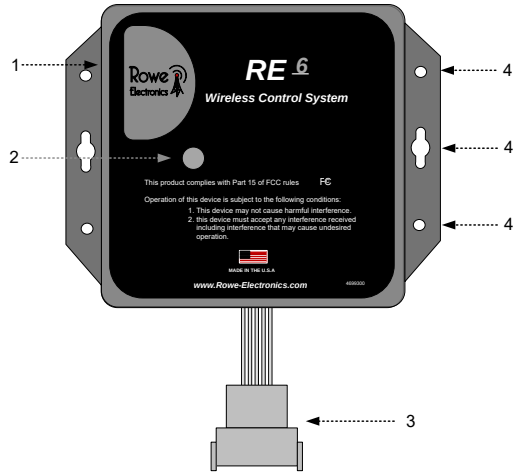

1. Magnetic sensor learn area (side of box)
2. Power and status indicator light
3. Connector for wire harness
4. Mounting holes

Safety:
Ensure that the transmitter is not left unsupervised while the receiver is powered on.
Caution:
Tamping with or using the product in a fashion other than intended can result in product malfunctions leading to injuries or death. Misuse or evidence of tampering will void the warranty.

Power Management/Restrictions:
The RE6 may be used to directly control power to applications. The systems have a maximum current rating which needs to be observed. Individual outputs are rated at 2.5A each. The maximum, combined simultaneous output limit is RE6 7.5Amps. Exceeding the limit will result in damage to the unit. For applications requiring higher output amperages, the RF systems may be used in conjunction with relays.

Rx/Tx Communication/Learning:
When purchased, the communication between the transmitter(s) and the receiver unit will already be established. If communication is lost or additional transmitters are added, the learn procedure is completed by holding the bottom of the key fob transmitter on the “learn” area. The indicator light on the receiver will turn solid red indicating it is ready to pair with the transmitter. Once the light is red, press a button on the transmitter and watch for the receiver indicator light to flash green indicating a successful pairing.

Power Supply:
An adequate power supply is essential for proper performance. The receiver draws a small amount of current when it is in stand-by mode and can discharge the battery over time. Always disconnect the RF unit when charging the battery or performing any electrical work. The receivers have an internal thermal fuse that will, in most cases, shut the unit down if it encounters overvoltage situations, but there are some conditions that it cannot protect against. If the thermal fuse does activate, the unit will shut down. Once the unit cools, the RF system will reset and function normally. Should the unit shut down in such a manner, inspect the electrical system that is powering the RF unit.

Mounting: Mount the unit with the electrical plug pointing down in an area that offers as much protection as possible and away from direct sources of high heat, moisture, vibration, and electromagnetic energy. Proper mounting and placement will ensure the best and long lasting performance.

Wiring:
The wire harness is specific to the wireless controller. It has a 7.5 amp fuse incorporated into the power lead going to the receiver. DO NOT REPLACE WITH A HIGHER AMPERAGE FUSE – USE 7.5 AMP FUSE ONLY. The wire harness should be inspected regularly for any damage.

Operation:
Once the unit is powered up by turning on the toggle switch, you are ready to operate. On both the receiver and transmitter unit there is an L.E.D. indicator. On power up, the receiver unit will flash four times. This indicates that the unit is getting power, and that it is ready to operate. The RE6 unit has a line of sight range of 100' feet. Keep in mind that battery condition, receiver mounting location, and multiple obstructions can reduce the effective range.

Battery Replacement:
The battery (#CR2032) in the key fob remotes should be changed annually prior to each operational season. If the transmitter battery voltage has dropped below 2.85 volts, the battery should be replaced. If inconsistent performance or reduced range is observed, the remote battery should be changed. The battery can be changed by removing the small screw on the back of the unit and splitting the transmitter case. Once opened, slide the battery out of its holder, and replace. To prevent damage, do not use screwdrivers or other metal tools inside of the transmitter case. Upon reassembly, apply silicone around the keypad edge and make certain that it is properly seated in the sealing channel and the two case halves are mated correctly. This will prevent water ingress.

Troubleshooting:
The majority of trouble shooting issues can be traced back to a power supply (battery) deficiency.

1. replace the remote battery
2. check the main power source for 12.4V
3. check the power and ground wire connections
4. check the fuse in the power wire

If you still are experiencing difficulties, a troubleshooting sheet can be found on our website:
www.rowe-electronics.com

Additionally, feel free to contact our customer support center at 515-981-5504.

Rowe Electronics, Inc.
339 Hakes Drive
Norwalk, IA, 50211
515-981-5504

Rowe Electronics and Patriot Equipment Seed Tenders

Pull Start Engines
The Rowe controller will not start a pull start engine from the key fob due to the pull start engine having no electric start installed.

Electric Start Engines
The electric start engines that Patriot Equipment uses on the seed tenders will also have a pull start for a backup in the event the electric start will not operate. Due to the electric start, the Rowe key fob can be used to start the engine.

To start the engine with the Rowe key fob, perform the following:

1. Rotate the key switch that is mounted to the engine to the "on" position.

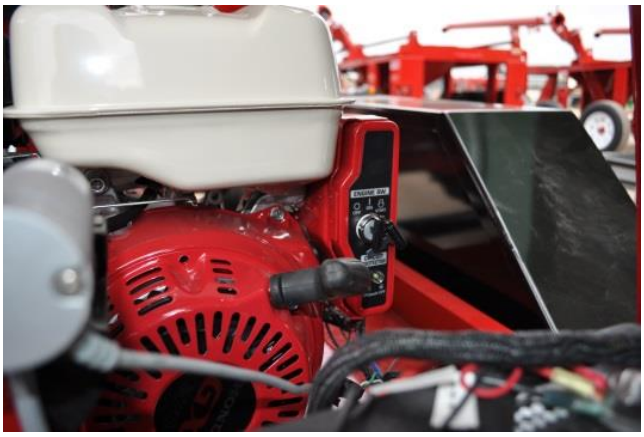

2. Turn the leg switch (located on the leg of the seed tender) to the "on" position.

3. Choke the engine as needed.
4. Depress the electric start on/start button on the key fob
5. The engine should begin to turn over and start
6. The key fob can be used to speed up and slow down the engine

Scale Operation

The Rowe system integrates with the scale to enable the user to dispense a predetermined amount of seed. To enable the automated dispensing, the toggle switch located next to the scale needs to be placed in the "auto" position. The "manual" position is for non-automated operation of the seed tender. Please refer to scale manual on the procedure to program the amount of weight of seed to dispense. Once programmed, the Rowe system will slow the engine down (stopping seed dispensing) when the predetermined amount of seed has been dispensed.

Changing Battery in Remote

Remove the small screw on the backside of the case and carefully pry open the two halves of the case. There are four parts that fit together; front side case, membrane, pcb, and backside case. Be careful not to pull out the “learn” magnet.

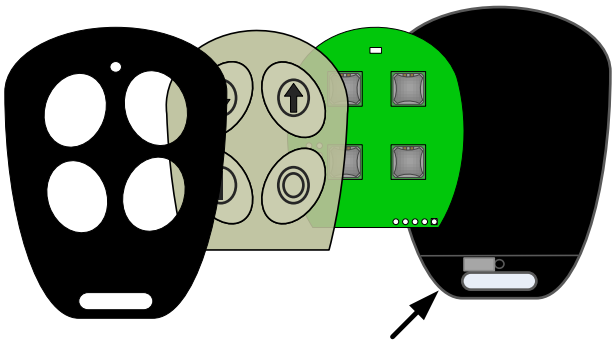

The front side of the case, membrane and pcb will likely stay together. Use a <u>non-metal</u> object to push the battery out as shown. Using a metal object will damage the board. Insert a new battery carefully with the positive face up.

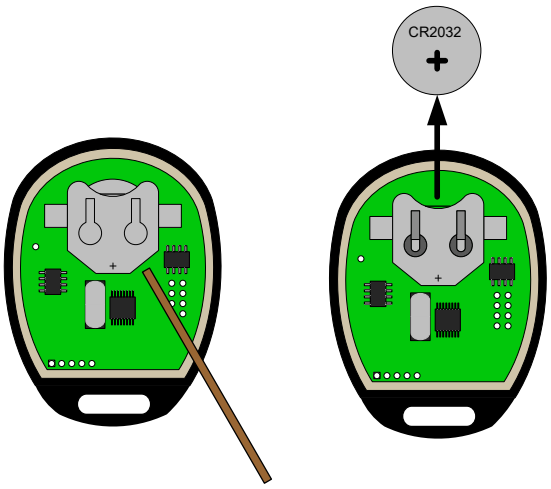

Add small bead of silicone around the rubber membrane edge before assembling the two halves of the case

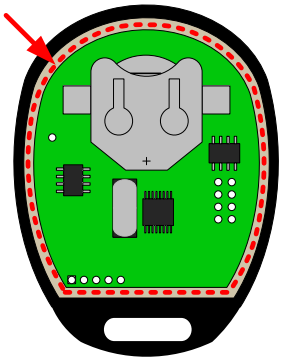

Gama Electronics

The Gama Electronics wireless control is designed to provide quality wireless performance. The unit is essentially maintenance free with the exception being a battery replacement for the key fob. All of the components are designed to provide a reliable and durable wireless system.

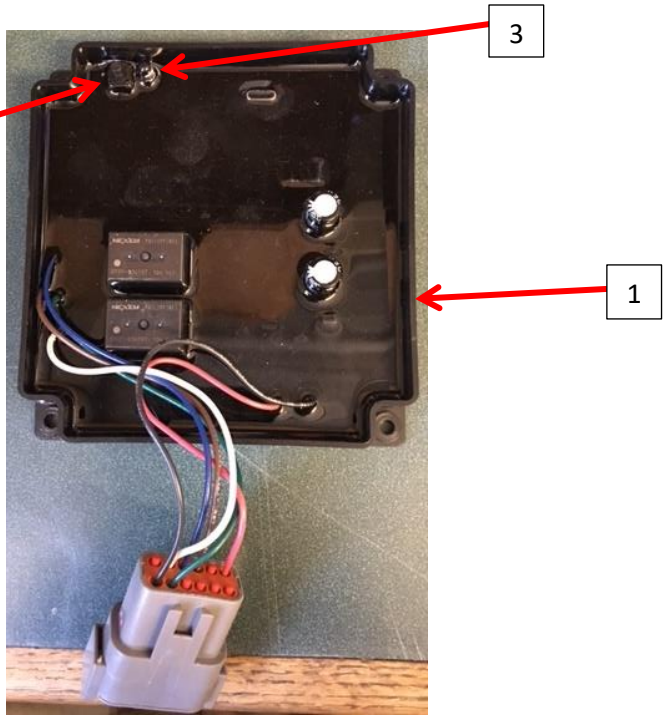

1. Radio Unit
2. Program Button
3. Indicator Light

Safety Precautions

DANGER!

Never leave the transmitter (key fob) left unsupervised when the receiver is powered on. The transmitter can be activated which could lead to an accident with severe injuries or death.

CAUTION!

If this product is used in a way other than intended, this can result in product malfunctions which can lead to injuries or death.

Any misuse or evidence of tampering will void the warranty.

Power

The Gama Electronics wireless controller may be used to directly control power to applications. An adequate power supply is necessary for correct performance. The radio unit will draw a small amount of power over time when it is in standby mode which can discharge the battery. Disconnect the radio unit when charging the battery or doing any electrical work.

Programming

Please see the “Programming GAMA Electronics”

Mounting
The radio unit should be mounted with the electrical plug pointing down in an area that will protect the radio unit as much as possible. Correct mounting will ensure correct performance as well as a long service life.

Wiring
The wire harness is specific to the radio unit. The wiring harness has a 7.5 amp fuse installed in it. Do Not use a higher amp rated fuse as this can damage the radio unit. Inspect the wire harness regularly for any damage.

Operation
Once the radio unit is powered up, it is ready for operation. The unit has an effective range; however, the range can be decreased depending upon battery condition, receiver mounting location, and numerous obstructions.

Battery Replacement
See "Battery Change Instructions."

Troubleshooting
Most issues will originate with power supply issues.

1. Replace the key fob battery
2. Check the main power for the radio
3. Inspect the power and ground wire connections
4. Check the fuse in the power wire

If you are unable to resolve any issue, feel free to contact Patriot Equipment at 308-832-0220.

Key Fob (Transmitter)

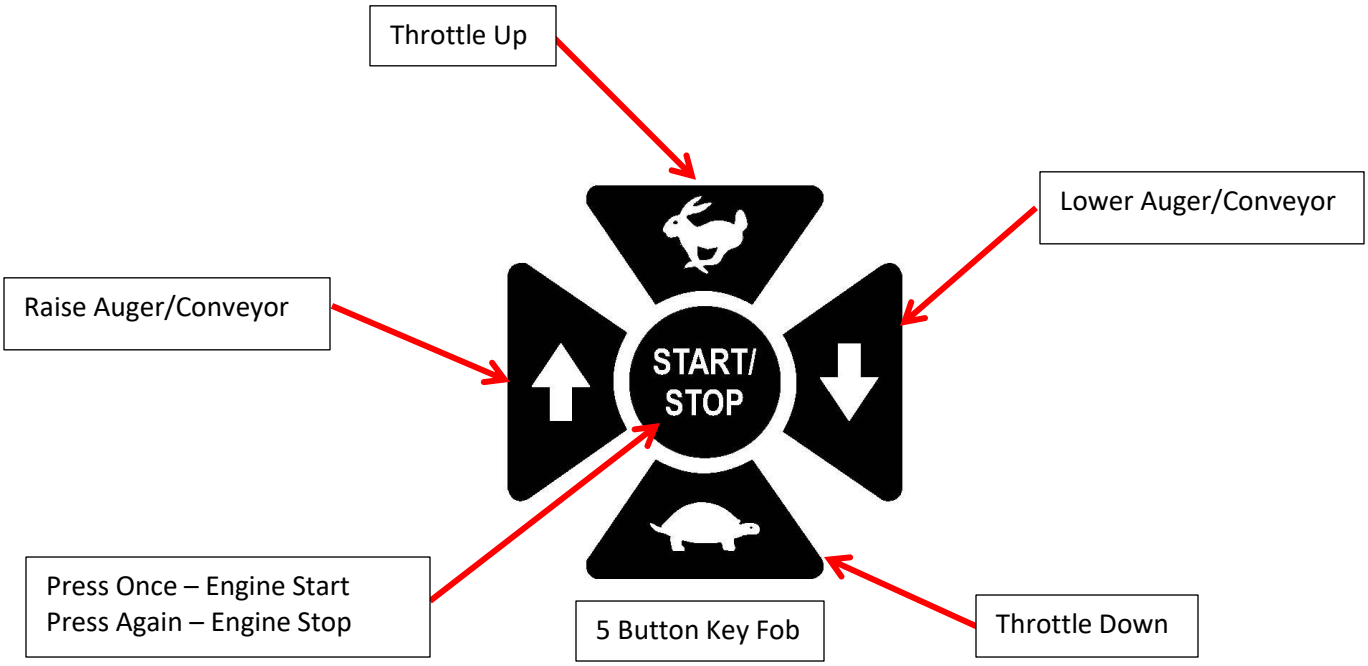
Throttle Up
Lower Auger/Conveyor
Raise Auger/Conveyor
START/
STOP
Press Once – Engine Start
Press Again – Engine Stop
5 Button Key Fob
Throttle Down

Programming GAMA Electronics

Press and hold the black button on the control unit until the red light comes on.

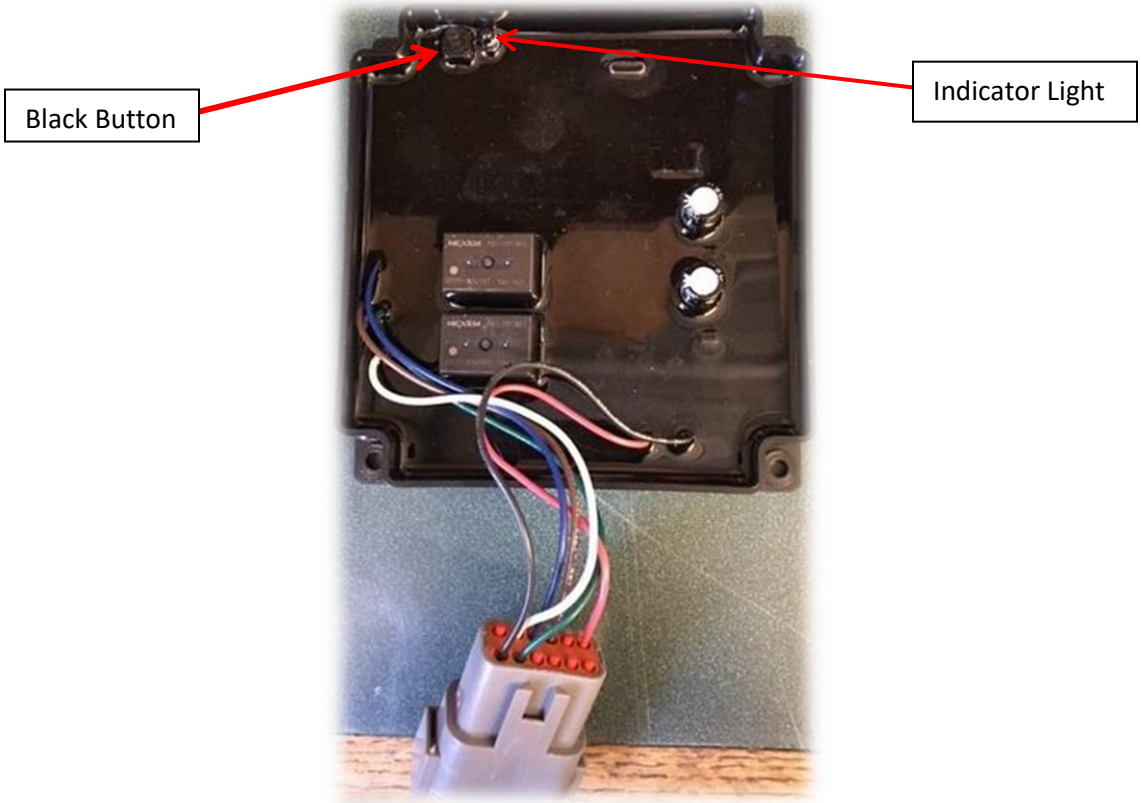

Press any key on the key fob and hold it until the red light blinks once. (Four button model shown)

The key fob is now programmed to the control unit.

GAMA Key Fob Battery Change

Turn the key fob over so that the housing retaining screws are visible. Using a phillips screw driver, remove the screws.

Screw locations that hold the key fob together.

Use a phillips screw driver to remove the screws and set aside

Once the screws have been removed, set them aside. Separate the key fob halves. Inspect the key fob for any internal damage or missing parts. The key fob should look like the below picture.

Remove the old A23 battery and discard in a safe manner. Insert a new A23 battery in the correct manner.

Reassemble the key fob. If the key fob doesn't work, the battery may be installed backwards.

Patriot Seed Treater

Owner's Manual

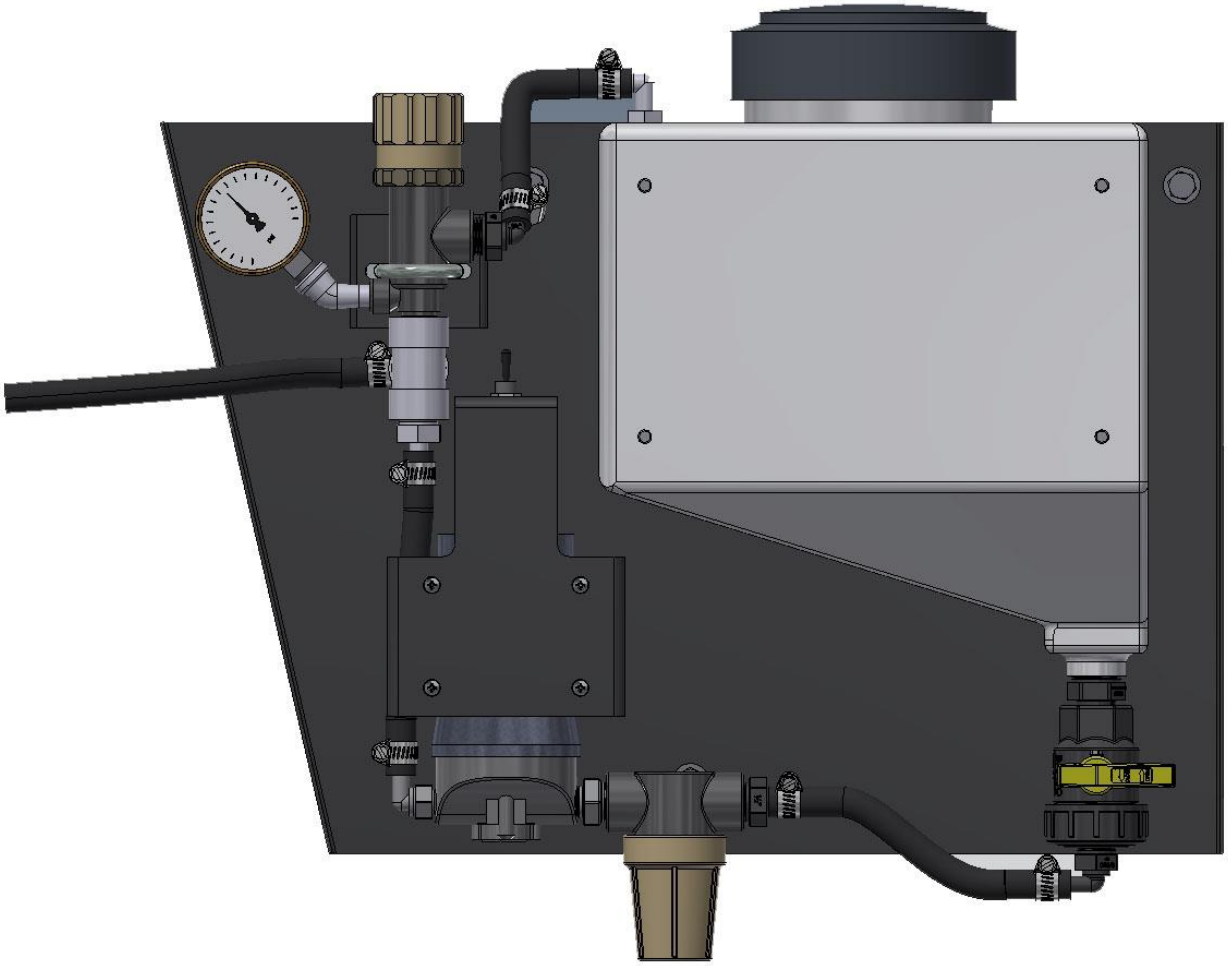

Manufactured by
Minden Machine Shop Inc.
1302 K Rd
Minden, NE 68959
1-800-264-6587

Wet Inoculator Parts

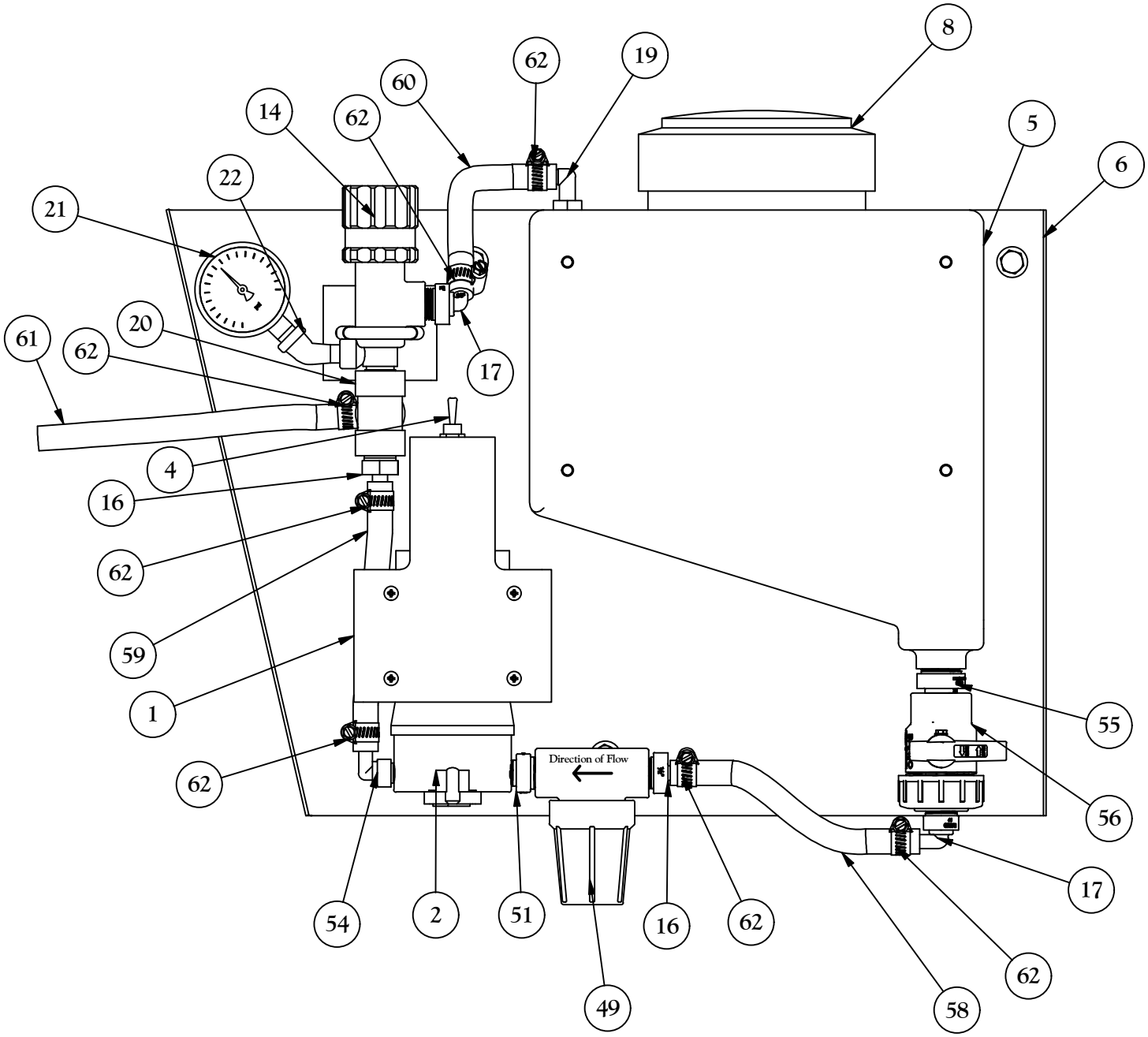

Minden Machine Shop Inc.
1302 K Road Minden, NE
800-264-6587 / 308-832-0220

Wet Inoculator Exploded View

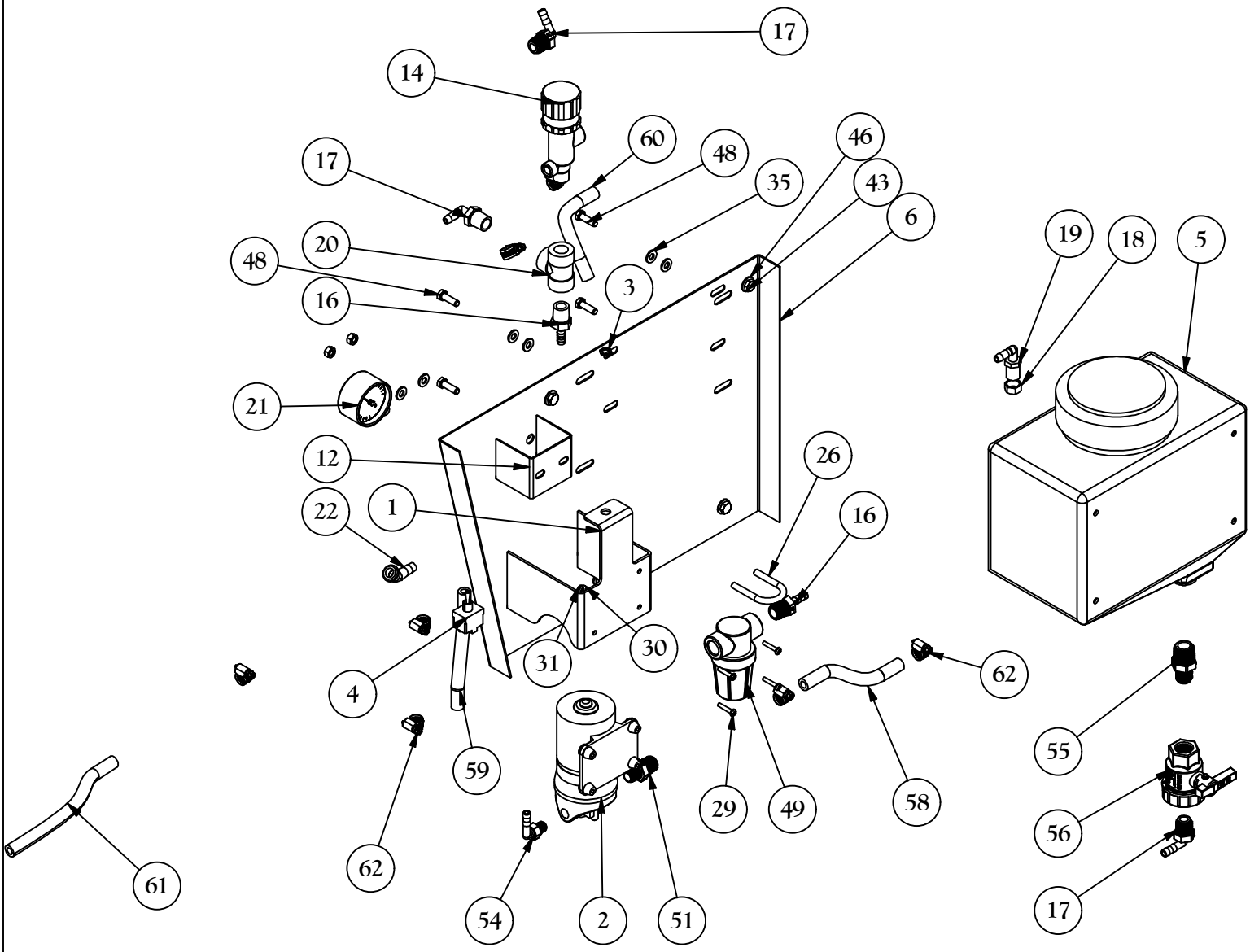

Minden Machine Shop Inc.
1302 K Road Minden, NE
800-264-6587 / 308-832-0220

Wet Inoculator Parts List			
ITEM	QTY	PART NUMBER	DESCRIPTION
1	1	WI1026	Pump Switch Bracket
2	1	WI1000	Pump
4	1	WI1030	Toggel Switch - 3 Position Momentary
5	1	WI1003	3 Gallon Tank
6	1	WI1025	Leg Base Bracket
8	1	WI1027	Tank Lid
14	1	WI1004	Pressure Relief Valve
16	2	WI1014	1/2 NPT Male x 3/8 Hose Barb
17	3	WI1009	1/2 Male NPT x 3/8 Hose Barb x 90
18	1	WI1039	11/16 Nylon Hex Nut
19	1	WI1015	11/16" Fine Thread x 3/8" HB 90
20	1	WI1008	Tee 1/2" NPT Female
21	1	WI1005	0-60 Liquid Filled Pressure Gauge
22	1	WI1006	Street Elbow 45 deg. 1/4"M x 1/4" F
26	1	WI1028	U-Bolt
29	4	S10-24x1"HHS	Pan Head Machine Screw
30	4	W#10F	Flat Washer
31	4	N10-24NYL	Nylock Nut
35	10	W5/16F	Washer
43	4	B3/8x1	Hex Bolt
44	4	N3/8N	Nut
45	4	W3/8L	Lock Washer
46	4	W3/8F	Washer
47	2	N5/16N	Nut
48	4	B5/16x1	Hex Bolt
49	1	WI1020	Strainer 100 Mesh
51	1	WI1021	Reducer Nipple 1/2 to 3/8
54	1	WI1010	3/8" MPT x 3/8" HB x 90
55	1	WI1011	3/4" NPT X 1/2" NPT REDUCER NIPPLE
56	1	WI1044	1/2" Union Valve
58	1	WI1019	Supply Hose
59	1	WI1019	Pump to Pressure Relief Hose
60	1	WI1019	Return Line
61	1	WI1019	Hose to auger
62	7	WI1035	Hose Clamp Size #6

Minden Machine Shop Inc.
1302 K Road Minden, NE
800-264-6587 / 308-832-0220

Wet Inoculator

Parts List				
ITEM	QTY	MMSI Part Number	PART NUMBER	DESCRIPTION
1	1	WI1024	210-303 12 FPT Check Valve	PVC Check Valve
2	1	WI1018	Quick TJ Nozzle Body_25 MPT_QJ1_4TT-NYB	#QJ 1/4TT-NYB - 1/4" Male NPT
3	1	WI1017	Tee Jet Adapter Cap QJ4676-1_4-NYR	#QJ4676-1/4-NYR
4	1	WI1002	Orifice Plate CP4916_12	Tee Jet Orifice Plate #CP4916_12
5	1	WI1007	SL025-90	1/4" Street Elbow
6	1	WI1022	RN050-025	1/2" to 1/4" Reducing Nipple
7	1	WI1014	HB050-038	1/2" NPT THREAD X 3/8" HOSE BARB
8	1	WI1001	Gasket CP19438_EPR	Rubber Gasket # CP19438-EPR

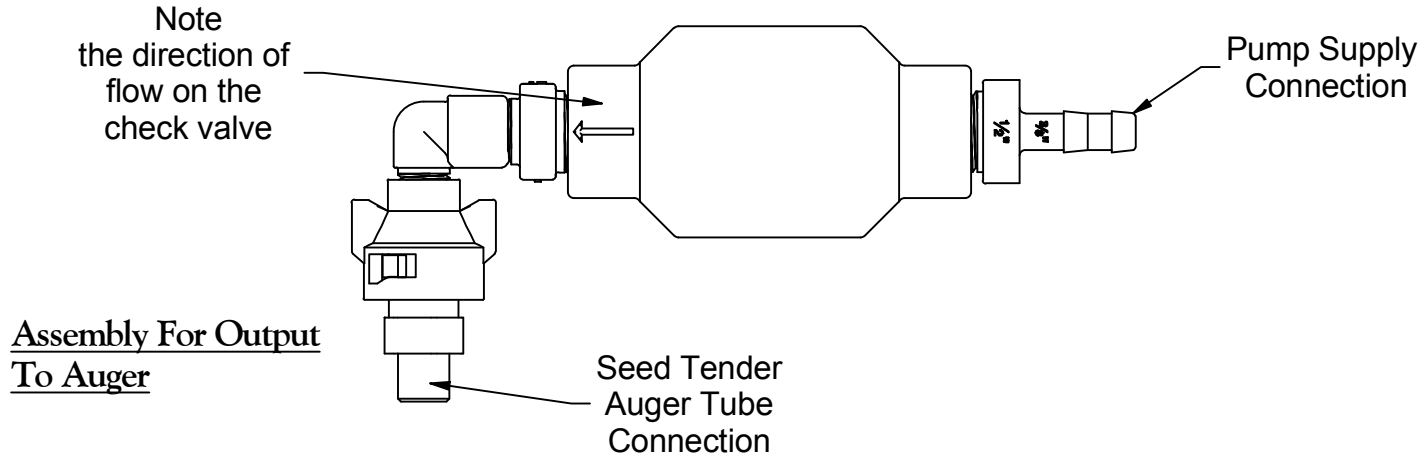

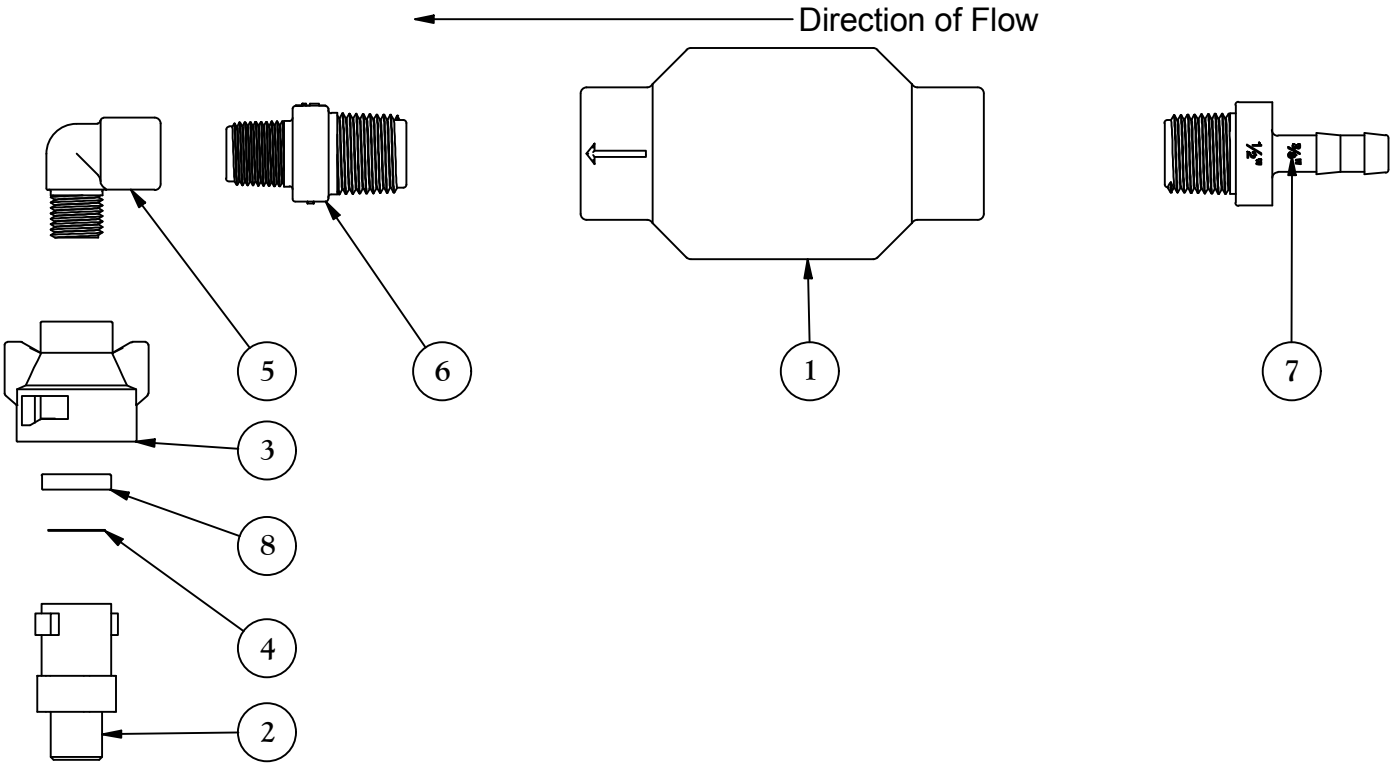

Minden Machine Shop Inc.
1302 K Road Minden, NE
800-264-6587 / 308-832-0220

Wet Inoculator System Wiring

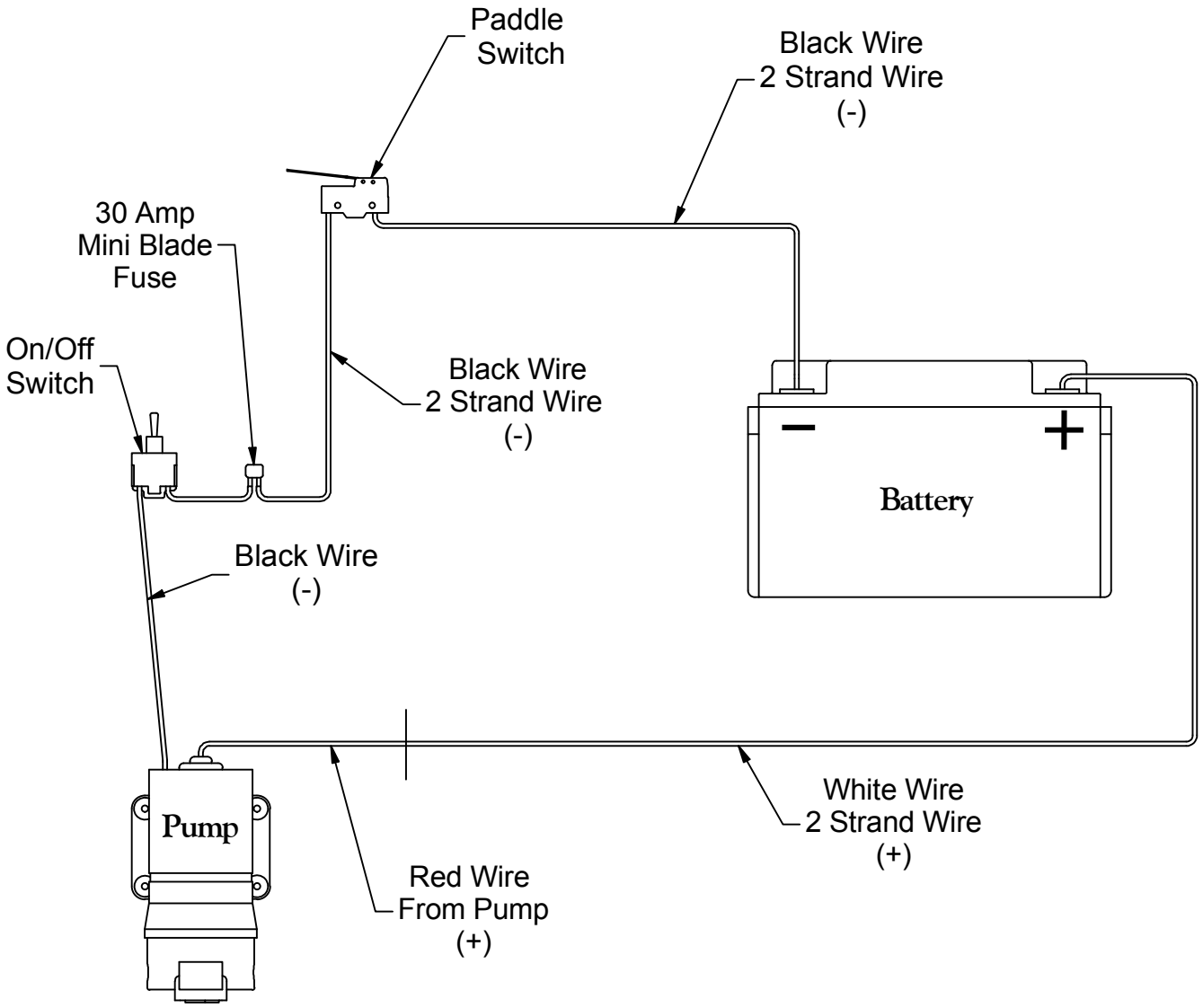

The red wire from the pump is positive (+) and will be connected to the white wire from the 2 strand wire loom.

The white wire (+) will be connected to the positive (+) post of the battery with a 3/8" ring terminal.

The black wire from the pump is negative (-) and will be connected to one side of the on/off switch with a ring terminal.

Attach the 30 amp fuse link wire to the other side of the on/off switch using a ring terminal. The other side of the fuse link will be connected to the black wire from the 2 strand wire loom.

The black wire from the 2 strand wire loom will be connected to one side the paddle switch using a ring terminal.

From the 2 strand wire, continue to use the black wire (-) and connect it to the other side of the paddle switch. The same black wire will be connected to the negative post (-) of the battery with a 5/16" ring terminal.

Minden Machine Shop Inc.
1302 K Road Minden, NE
800-264-6587 / 308-832-0220

To assemble the Wet Inoculator:

Use sealant tape or paste when assembling parts. The parts are plastic, so be careful when tightening so parts don't break or crack. Refer to the diagrams for assembly to aid in assembly.

1. Locate the 3 gallon tank (5), 11/16" thread x 3/8" HB x 90 fitting (19), and 11/16" nut (18). Drill a 11/16" hole in the corner of the tank. Be sure to locate correct corner (refer to drawing) and drill the hole allowing enough room for the nut to be threaded on. Once the hole is drilled, remove the tank lid and clean out the tank. Next, place the HB fitting into the hole and use the nut to retain the fitting into the tank. The finished product should match the drawing.

2. Locate the 3 gallon tank (5), 3/4" to 1/2" reducer nipple (55), 1/2" valve (56), and the 1/2" MPT x 3/8" HB x 90 fitting. Thread the reducer nipple to the valve, and then the valve to the hose barb fitting. Now thread this assembly into the tank. The assembly will need to match the assembly that is shown.

3. Locate: electric pump (2), 1/2" to 1/4" reducing nipple (51), screen (49), 1/2" MPT x 3/8" hose barb (50), and the 1/4" MPT x 3/8" hose barb x 90 fitting (54). Determine the flow of the pump (should be a flow arrow on the pump)and place the filter on the inlet side of the pump. Thread the parts together as shown. Make sure your assembly matches what is shown.

4. Locate the pressure reducing valve (14), 1/2" FPT tee (20), 1/2" MPT x 3/8" HB fitting (16), 2 each of 1/2" MPT x 3/8" HB x 90 fitting (17), 45 degree 1/4" Street Elbow (22), and 0-60 psi gauge (21). Assemble as shown in the diagram. Set aside.

5. Locate the Base Bracket (6) and the tank assembly from step 2. Mount the tank assembly to the base bracket using 4 ea of 5/16" x 1" bolts (48), 5/16" flat washers (35) and 5/16" lock washers. Tighten the bolts carefully.

6. Locate the pump assembly from step 3. Mount the pump to the base bracket using 4 of the No. 10 pan head screws with washers and nuts (29, 30, and 31). Please note how the pump is mounted on the diagram. The inlet side of the pump will point towards the supply tank. Please note that the inlet side of the pump should also have the filter attached to it. Tighten all fasteners.

7. Locate the pressure relief valve assembly from step 4. Use the 5/16" U-bolt (26), 5/16" nuts (47), and 5/16" washer (35) to mount to the base bracket. Use the diagram to locate where to mount. Be careful when tightening the u-bolt due to the pressure relief valve being made of plastic.

8. Locate the 3/8" hose. Make the supply hose from the valve to the strainer (58). Use two 3/8" hose clamps (62) to keep the hose in place. Tighten the hose clamps.

9. With the 3/8" hose make the hose (59)to connect the outlet side of the pump to the inlet side of the pressure relief valve (bottom). Use two 3/8" hose clamps (62) to keep the hose in place. Tighten the hose clamps.

Minden Machine Shop Inc.
1302 K Road Minden, NE
800-264-6587 / 308-832-0220

10. Using the 3/8" hose, make the hose to connect the return line (60) from the pressure relief valve to the corner of the tank with the hose barb fitting. Use two 3/8" hose clamps (62) to keep the hose in place. Tighten the hose clamps.

11. Once the wet inoculator system is mounted to the seed tender using the 4 - 3/8" x 1" bolts (43), flat washers (46), lock washers and nuts (43, 44, 45, 46), make the hose (61) to connect the outlet of the pressure relief valve to the auger inlet system. Use two 3/8" hose clamps (62) to keep the hose in place. Tighten the hose clamps.

12. With the plumbing and mounting completed, next are the electrical connections. Refer to the electrical diagram for assistance. Depending upon the style of seed tender that you have, the mounting positions of the wet inoculation system will be in different locations (usually on the driver's side rear corner of the seed tender), however the wiring is essentially the same.

1. Begin at the pump that has a positive (+) red wire and a negative (-) black wire.
2. Attach the black wire of the pump to one side of the on/off switch of the wet inoculator.
3. Attach one wire of the fuse link to the other side of the on/off switch of the wet inoculator.
4. Locate the two strand wire loom. Remove the outer sheath to expose the two wires. Connect the white wire to the red wire of the pump.
5. Connect the black wire of the two strand wire to the other wire of the fuse link.
6. Route the two strand wire through the wire ties on the inside of the tender. Route the wire to the paddle switch and then end at the battery.
7. Where the two strand wire loops at the paddle switch, cut the outer sheath and remove. There should be two wires (one white and one black) that run from the paddle switch to the battery.
8. At the paddle switch, cut the black wire (leave enough room to strip the wire) attach the black wire end from the two strand wire to one side of the paddle switch. With the remaining black wire that was cut, attach this to the other side of the paddle switch and route the battery. Attach the black wire to the negative post of the battery with a 5/16" eyelet connector.
9. Locate the white wire from the two strand wire and connect this wire to the positive post of the battery using a 3/8" eyelet connector.
10. This will complete the wiring of the wet inoculator.

13. Start the engine, turn the wet inoculator switch to on and test the system. The pump should start when the engine rpm is increased.

14. If you experience any difficulty, please contact Patriot Equipment for assistance 1-800-264-6587.

Minden Machine Shop Inc.
1302 K Road Minden, NE
800-264-6587 / 308-832-0220

The seed treater comes with a metering disc (orifice) that will help regulate the amount of inoculant that will be applied to the seed. Use the guide below to assist in determining the pressure the treater should be set at.

Seed Treatment Guide

IF YOU NEED THIS OZ PER 50 LBS	TOTAL OZ PER MINUTE OF LIQUID AT 400 LB PER MINUTE OF SEED FLOW		SET PRESSURE GUAGE AT THIS PSI USING A CP4916-39
1	8		4.4
1.1	8.8		5.3
1.2	9.6		6.3
1.3	10.4		7.4
1.4	11.2		8.5
1.5	12		9.8
1.6	12.8		11.1
1.7	13.6		12.6
1.8	14.4		14.1
1.9	15.2		15.7
2	16		17.4
2.1	16.8		19.2
2.2	17.6		21.1
2.3	18.4		23.0
2.4	19.2		25.1
2.5	20		27.2

This chart is only to be used as a guide. Manual calibration must be done to insure that the weight per minute from the auger is known exactly and the ounces per minute from the treater are known exactly.

Dry Inoculator Instructions

FreeFlo Dry Inoculator (By Lundell Plastics Corporation) Manual

For Use on dry inoculants, talc, graphite and blends of these materials. Not for use with unblended peat based inoculants.

Specifications:
Voltage: 12VDC
Current Draw: 3A
Hopper Capacity: 35lb
Output: 5-30 lb/hr or 20-80 lb/hr

Mounting
The tank should be mounted in a location that will allow the auger discharge to be just above the auger or conveyor near the center of the seed flow. Mount the tank so it is as vertical as possible. Mounting at an angle will decrease the clean out capabilities. Once the tank is mounted, remove the plug from the bottom of the tee. Slide the auger over the shaft and tighten the set screw ensuring the set screw is seated on the flat portion of the shaft. Once the auger is installed, slide the PVC auger tube over the auger flighting. Fasten the discharge end of the auger tube to the tender frame.

Wiring
Supply 12V power to the red wire and ground the black wire. Be sure not to reverse the polarity as this will damage the unit. The 12V power can come from an intermittent source such as a solenoid valve to allow the unit to only run while the auger or conveyor is operating.

Operational Instructions
Calculate the approximate required application rate in lbs./hr. Once the desired application rate is known, set the dry inoculator to the approximate corresponding setting.

Example:
On a 20-80 lb/hr unit, setting 3 will apply approximately 40lb/hr or product.

Once the unit is operating, visually inspect the seed for adequate application. Over application can be detected by excess product blowing off the seed as it is added to the planter just as lack of any dust can be a sign of under application. Once in use, the unit can be fine tuned based off of actual results.

Minden Machine Shop Inc.
1302 K Road Minden, NE
308-832-0220

Dry Inoculator Wiring Diagram

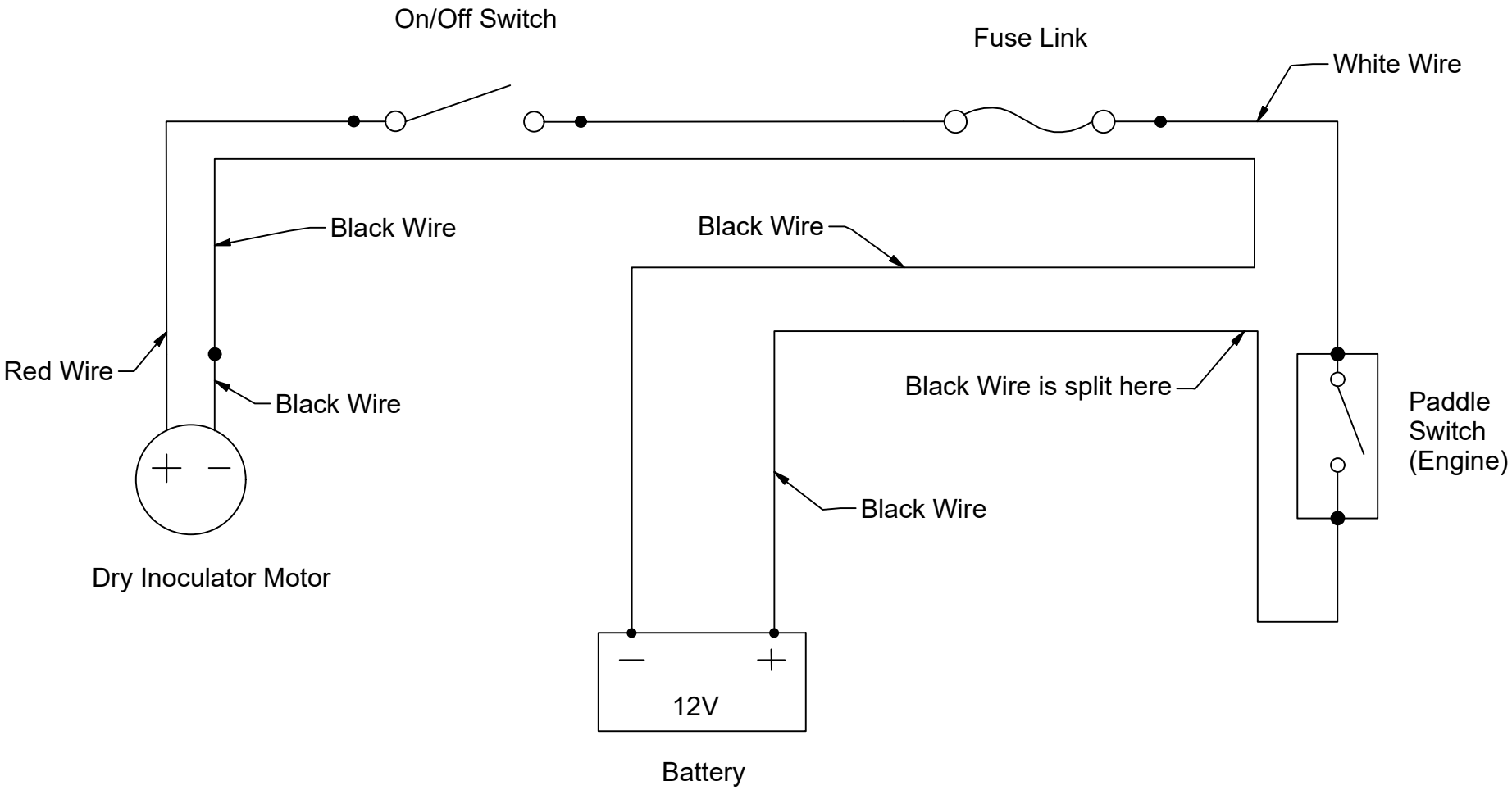

Patriot Equipment 1302 K Road Minden, NE 308-832-0220	